FIG. 1

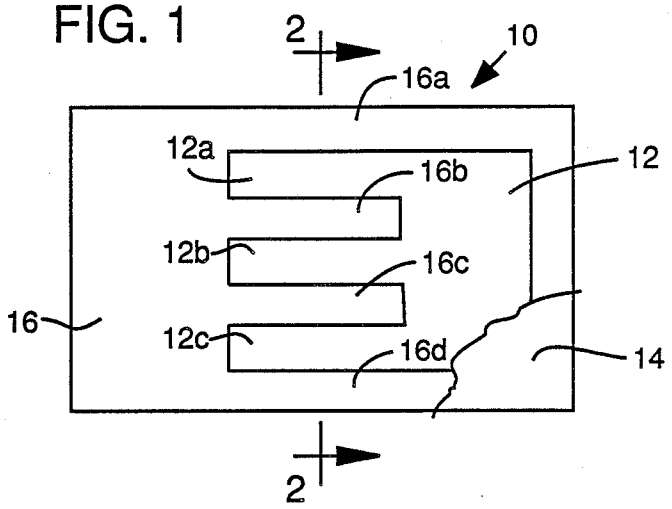
2
10
16a
12a
16b
12
12b
16c
16
12c
16d
14
2

FIG. 2

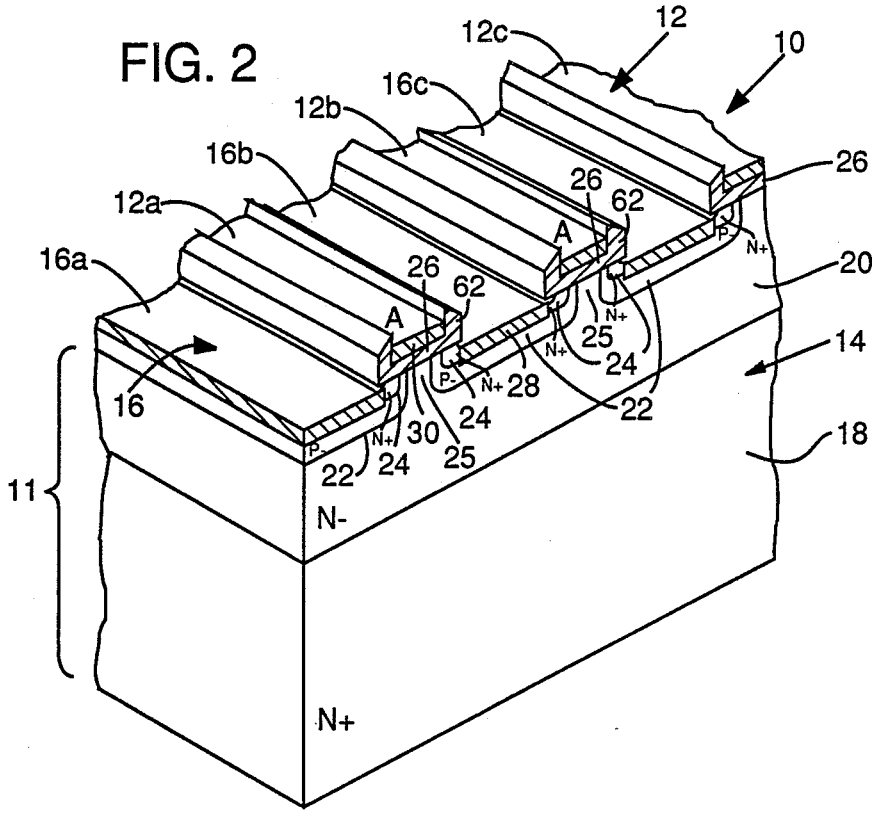
12c
12
10
16c
12b
16b
26
26
62
12a
A
16a
26
62
20
A
25
N+
N+
24
14
16
P-
N+
28
22
24
30
25
18
P-
N+
22
24
11
N-
N+