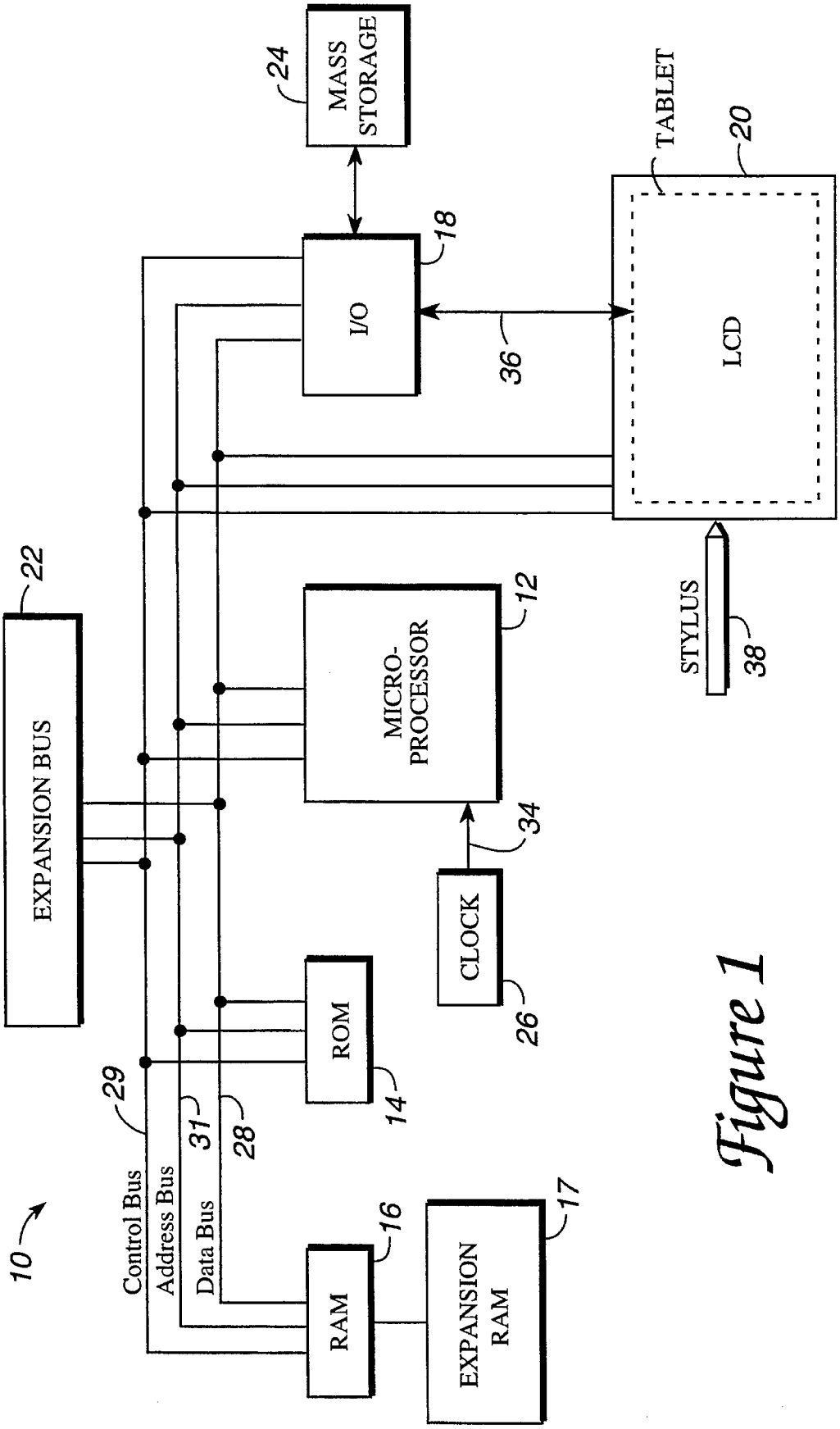
MASS STORAGE
24
TABLET
20
I/O
18
36
LCD
22
EXPANSION BUS
MICRO-PROCESSOR
12
STYLUS
38
34
CLOCK
26
ROM
14
29
31
28
Control Bus
Address Bus
Data Bus
10
RAM
16
EXPANSION RAM
17

Figure 1