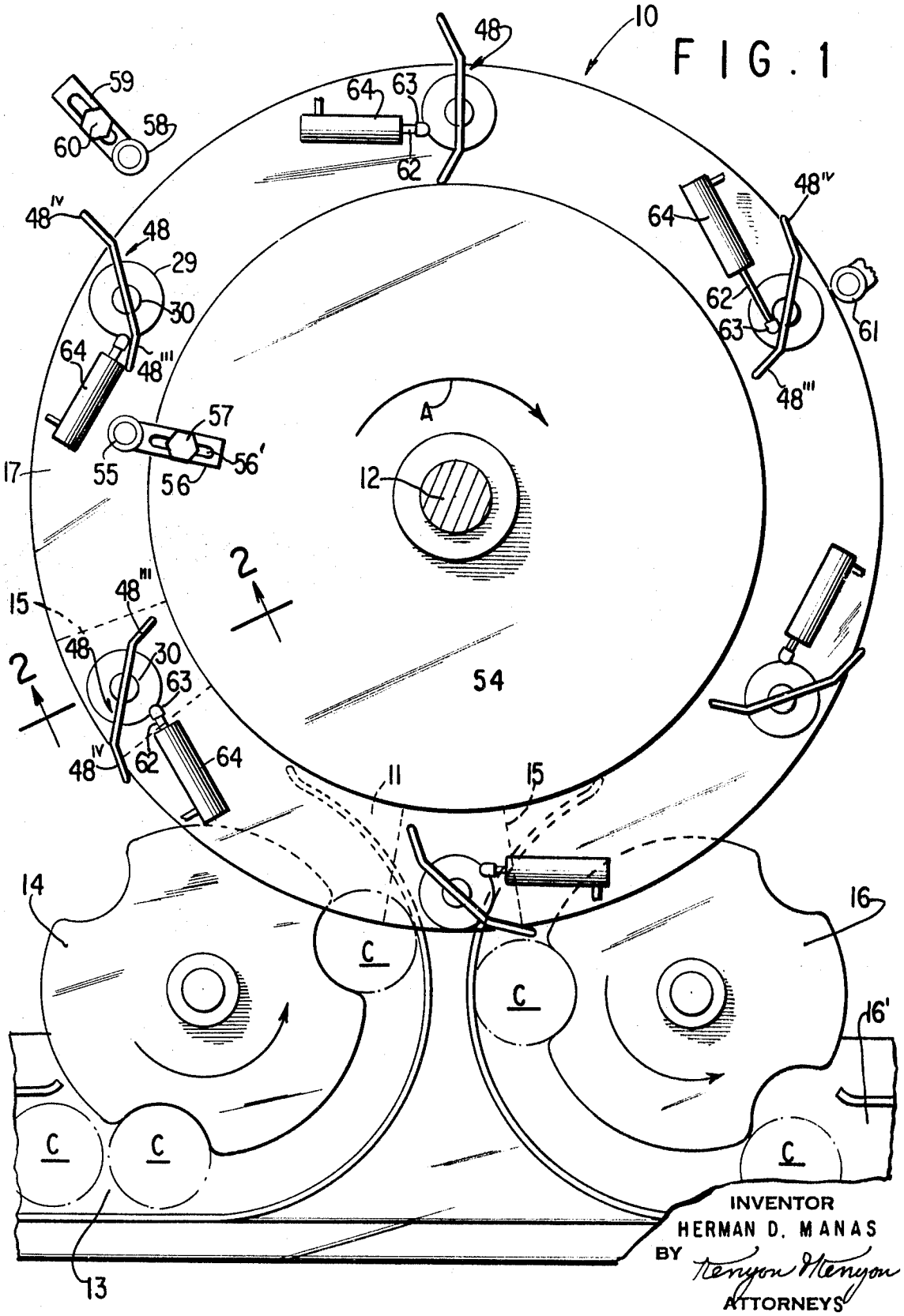

INVENTOR
HERMAN D. MANAS
BY Kenyon & Kenyon
ATTORNEYS