US006480510B1

(12) **United States Patent**
Binder

(10) **Patent No.: US 6,480,510 B1**
(45) **Date of Patent: Nov. 12, 2002**

(54) **LOCAL AREA NETWORK OF SERIAL INTELLIGENT CELLS**

(75) Inventor: **Yehuda Binder**, Hod-Hasharon (IL)

(73) Assignee: **SerCoNet Ltd.**, Ra'anana (IL)

(*) Notice: Subject to any disclaimer, the term of this patent is extended or adjusted under 35 U.S.C. 154(b) by 0 days.

(21) Appl. No.: **09/123,486**

(22) Filed: **Jul. 28, 1998**

(51) **Int. Cl.**[7] **H04J 3/08**; H04M 11/04; H04L 5/14

(52) **U.S. Cl.** **370/502**; 340/310.01; 370/276

(58) **Field of Search** 370/274, 276, 370/285, 293, 295–296, 400–402, 463, 475, 419–420, 501–502, 908, 910–911, 408; 340/825.06, 825.07, 310.01, 693.1, 870.39

(56) **References Cited**

U.S. PATENT DOCUMENTS

3,924,077	A		12/1975	Blakeslee	370/458
4,507,721	A		3/1985	Yamano et al.	363/20
4,714,912	A		12/1987	Roberts et al.	340/310.02
4,745,391	A		5/1988	Gajjar	340/310.07
4,772,870	A		9/1988	Reyes	340/310.02
4,782,322	A		11/1988	Lechner et al.	340/310.02
4,825,349	A		4/1989	Marcel	379/413
4,896,349	A		1/1990	Kubo et al.	375/219
4,918,690	A	*	4/1990	Markkula, Jr. et al.	370/400
5,010,399	A		4/1991	Goodman et al.	379/102.03
5,065,133	A		11/1991	Howard	340/310.01
5,148,144	A	*	9/1992	Sutterlin et al.	340/310.01
5,247,347	A		9/1993	Litteral et al.	725/114
5,311,114	A	*	5/1994	Sambamurthy et al.	370/910
5,311,593	A	*	5/1994	Carmi	370/400
5,351,272	A		9/1994	Abraham	340/310.02
5,404,127	A		4/1995	Lee et al.	340/310.02
5,491,463	A		2/1996	Sargeant et al.	340/310.01
5,504,454	A		4/1996	Daggett et al.	375/328
5,535,336	A		7/1996	Smith et al.	340/825.52
5,579,221	A		11/1996	Mun	340/825.27
5,581,801	A		12/1996	Spriester et al.	725/149
5,684,826	A		11/1997	Ratner	340/310.01

* cited by examiner

Primary Examiner—Ajit Patel
Assistant Examiner—Maikhanh Tran
(74) *Attorney, Agent, or Firm*—Mark M. Friedman

(57) **ABSTRACT**

A serial intelligent cell (SIC) and a connection topology for local area networks using Electrically-conducting media. A local area network can be configured from a plurality of SIC's interconnected so that all communications between two adjacent SIC's is both point-to-point and bidirectional. Each SIC can be connected to one or more other SIC's to allow redundant communication paths. Communications in different areas of a SIC network are independent of one another, so that, unlike current bus topology and star topology, there is no fundamental limit on the size or extent of a SIC network. Each SIC can optionally be connected to one or more data terminals, computers, telephones, sensors, actuators, etc., to facilitate interconnectivity among such devices. Networks according to the present invention can be configured for a variety of applications, including a local telephone system, remote computer bus extender, multiplexers, PABX/PBX functionality, security systems, and local broadcasting services. The network can use dedicated wiring, as well as existing wiring as the in-house telephone or electrical wiring.
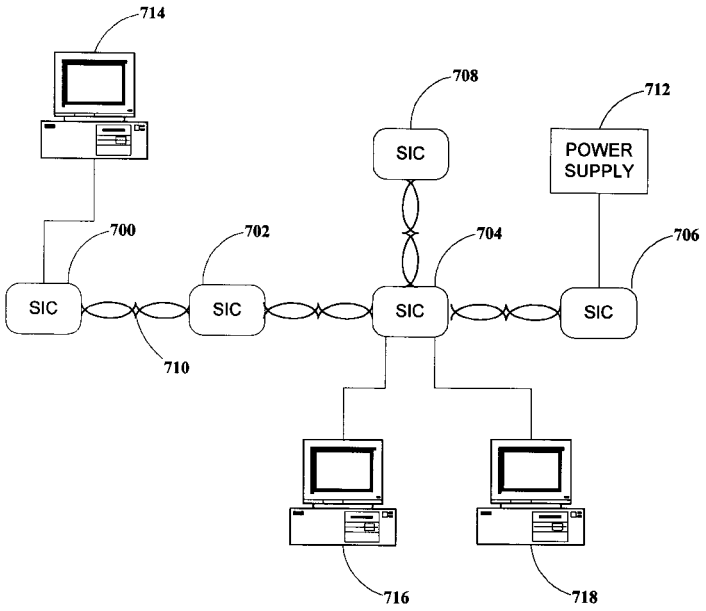
12 Claims, 9 Drawing Sheets