US008663510B2

(12) **United States Patent**
Graney et al.

(10) **Patent No.: US 8,663,510 B2**
(45) **Date of Patent: Mar. 4, 2014**

(54) **METHOD FOR INJECTION MOLDING AN INTRAOCULAR LENS DEVICE**

(75) Inventors: **Anita M. Graney**, Rochester, NY (US); **Graham W. Biddle**, Ontario, NY (US); **Thomas Lodadio**, Rochester, NY (US); **William J. Appleton**, Rochester, NY (US)

(73) Assignee: **Bausch & Lomb Incorporated**, Rochester, NY (US)

(*) Notice: Subject to any disclaimer, the term of this patent is extended or adjusted under 35 U.S.C. 154(b) by 160 days.

(21) Appl. No.: **13/273,319**

(22) Filed: **Oct. 14, 2011**

(65) **Prior Publication Data**

US 2012/0032361 A1 Feb. 9, 2012

Related U.S. Application Data

(62) Division of application No. 10/954,322, filed on Sep. 30, 2004, now Pat. No. 8,057,217.

(51) **Int. Cl.**
B29D 11/00 (2006.01)

(52) **U.S. Cl.**
USPC **264/2.5**; 264/328.8; 264/328.12; 425/808

(58) **Field of Classification Search**
USPC 264/1.1, 1.7, 2.5, 328.8, 328.1, 328.12; 425/808, 572, 573
See application file for complete search history.

(56) **References Cited**

U.S. PATENT DOCUMENTS

3,971,841	A	7/1976	Rubinstein	
4,252,294	A	2/1981	Uchio	
4,348,484	A	9/1982	Joormann et al.	
4,560,342	A	12/1985	Ishida et al.	
4,619,662	A	10/1986	Juergens, Jr.	
4,836,960	A	6/1989	Spector et al.	
5,143,659	A	9/1992	Hamblen et al.	
5,275,623	A	1/1994	Sarfarazi	
5,585,049	A	12/1996	Grisoni et al.	
5,603,871	A	2/1997	Koseko et al.	
5,645,665	A	7/1997	Salazar et al.	
5,674,435	A	10/1997	Blake	
5,762,836	A	6/1998	Bos et al.	
5,770,119	A	6/1998	Walker et al.	
5,904,746	A	5/1999	Okada	
6,077,470	A *	6/2000	Beaumont	264/297.2
6,096,078	A	8/2000	McDonald	
6,197,227	B1	3/2001	Appleton et al.	
6,210,610	B1	4/2001	Saito et al.	

(Continued)

FOREIGN PATENT DOCUMENTS

EP	0 875 354	10/2002
EP	1 633 550	9/2004

(Continued)

OTHER PUBLICATIONS

Engineering Materials Handbook, Desk Edition, Nov. 1995.

(Continued)

Primary Examiner — Mathieu D. Vargot
(74) *Attorney, Agent, or Firm* — Toan P. Vo

(57) **ABSTRACT**

Apparatus and methods for injection molding intraocular lenses includes an embodiment having first and second runners extending into first and second optic cavities of a mold configured to make a dual optic lens device.
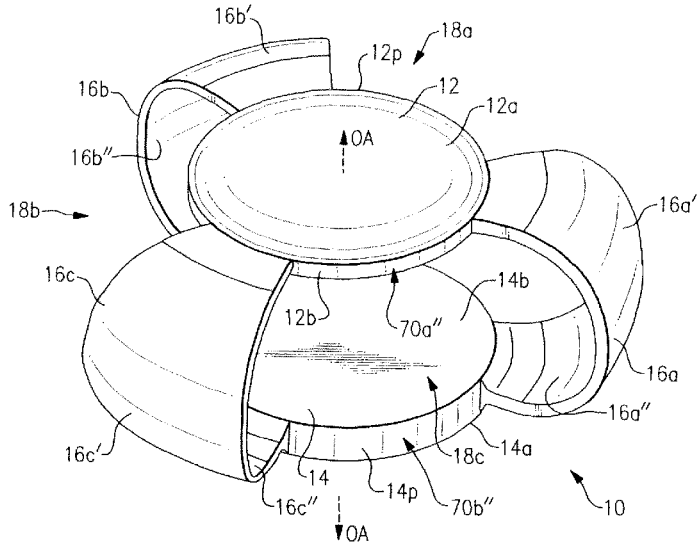
31 Claims, 10 Drawing Sheets