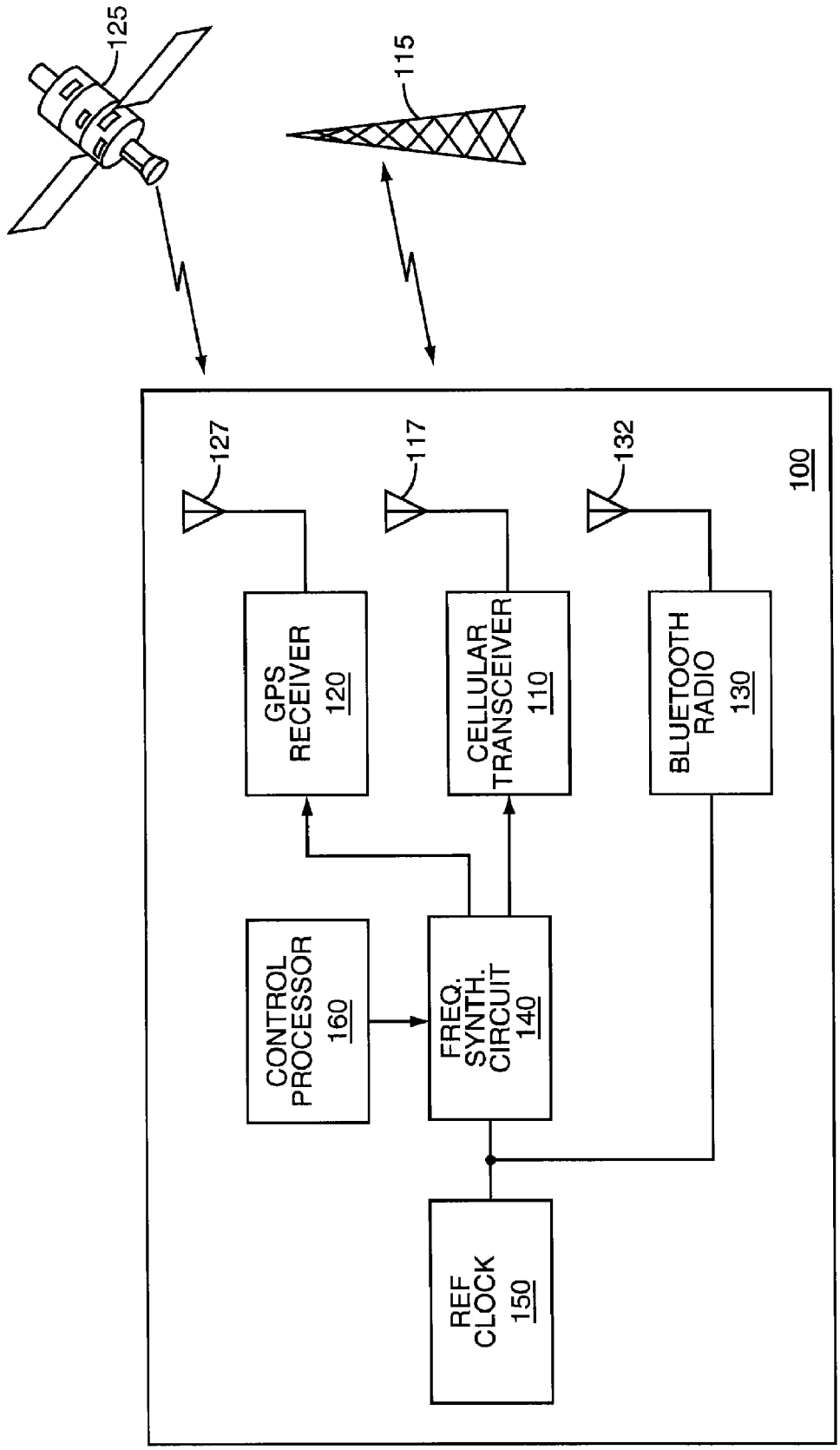
125
115
127
117
132
100
GPS RECEIVER 120
CELLULAR TRANSCEIVER 110
BLUETOOTH RADIO 130
CONTROL PROCESSOR 160
FREQ. SYNTH. CIRCUIT 140
REF CLOCK 150

FIG. 1