US007628810B2

(12) **United States Patent**
Christie et al.

(10) **Patent No.: US 7,628,810 B2**
(45) **Date of Patent: Dec. 8, 2009**

(54) **MASK CONFIGURED TO MAINTAIN NUTRIENT TRANSPORT WITHOUT PRODUCING VISIBLE DIFFRACTION PATTERNS**

(75) Inventors: **Bruce A. Christie**, Upland, CA (US); **Thomas A. Silvestrini**, Alamo, CA (US)

(73) Assignee: **AcuFocus, Inc.**, Irvine, CA (US)

(*) Notice: Subject to any disclaimer, the term of this patent is extended or adjusted under 35 U.S.C. 154(b) by 826 days.

(21) Appl. No.: **10/854,033**

(22) Filed: **May 26, 2004**

(65) **Prior Publication Data**

US 2005/0033420 A1 Feb. 10, 2005

Related U.S. Application Data

(60) Provisional application No. 60/473,824, filed on May 28, 2003, provisional application No. 60/479,129, filed on Jun. 17, 2003.

(51) **Int. Cl.**
A61F 2/14 (2006.01)
G02C 7/04 (2006.01)

(52) **U.S. Cl.** **623/5.13**; 351/165

(58) **Field of Classification Search** ..... 623/FOR. 103, 623/FOR. 104, 5.11–5.16, 6.14, 6.17; 351/165 US
See application file for complete search history.

(56) **References Cited**

U.S. PATENT DOCUMENTS

564,518	A	7/1896	Heilborn
1,206,132	A	11/1916	Otte
1,959,915	A	5/1934	Guthrie
2,129,305	A	9/1938	Feinbloom
2,714,721	A	8/1955	Stone, Jr.
3,034,403	A	5/1962	Neefe
3,270,099	A	8/1966	Camp
3,339,997	A	9/1967	Wesley
3,458,870	A	8/1969	Stone, Jr.
3,507,566	A	4/1970	Knapp
3,578,850	A	5/1971	Grant
3,600,098	A	8/1971	Mohrman
3,726,587	A	4/1973	Kendall
3,794,414	A	2/1974	Wesley

(Continued)

FOREIGN PATENT DOCUMENTS

EP 0 457 553 A2 11/1991

(Continued)

OTHER PUBLICATIONS

EPO Supplementary Search Report for Application No. 04753697.4, dated Apr. 21, 2008 in 3 pages (003VEP).

(Continued)

Primary Examiner—David H. Willse
(74) *Attorney, Agent, or Firm*—Knobbe, Martens, Olson & Bear, LLP

(57) **ABSTRACT**

A mask configured to be implanted in a cornea of a patient to increase the depth of focus of the patient includes an anterior surface, a posterior surface, and a plurality of holes. The anterior surface is configured to reside adjacent a first corneal layer. The posterior surface is configured to reside adjacent a second corneal layer. The plurality of holes extends at least partially between the anterior surface and the posterior surface. The holes of the plurality of holes are configured to substantially eliminate visible diffraction patterns.
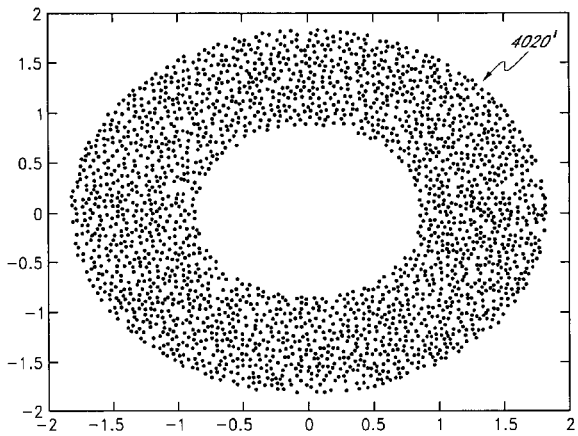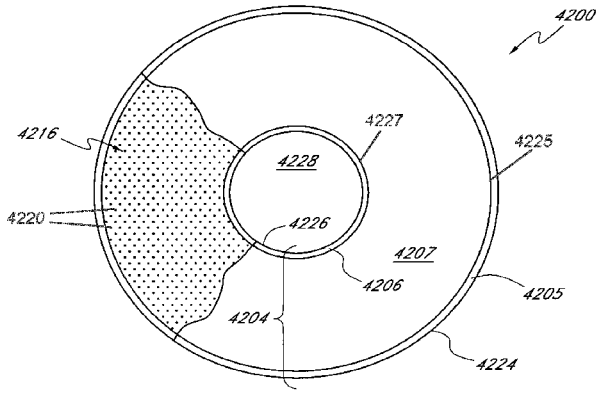
20 Claims, 31 Drawing Sheets