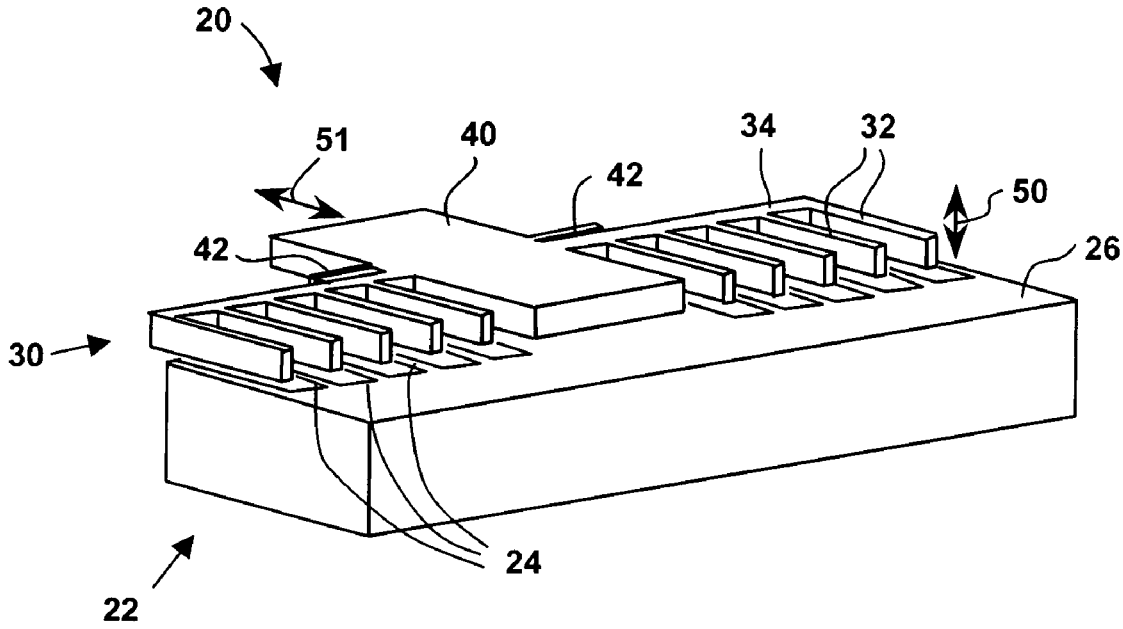

FIG. 1

(PRIOR ART)

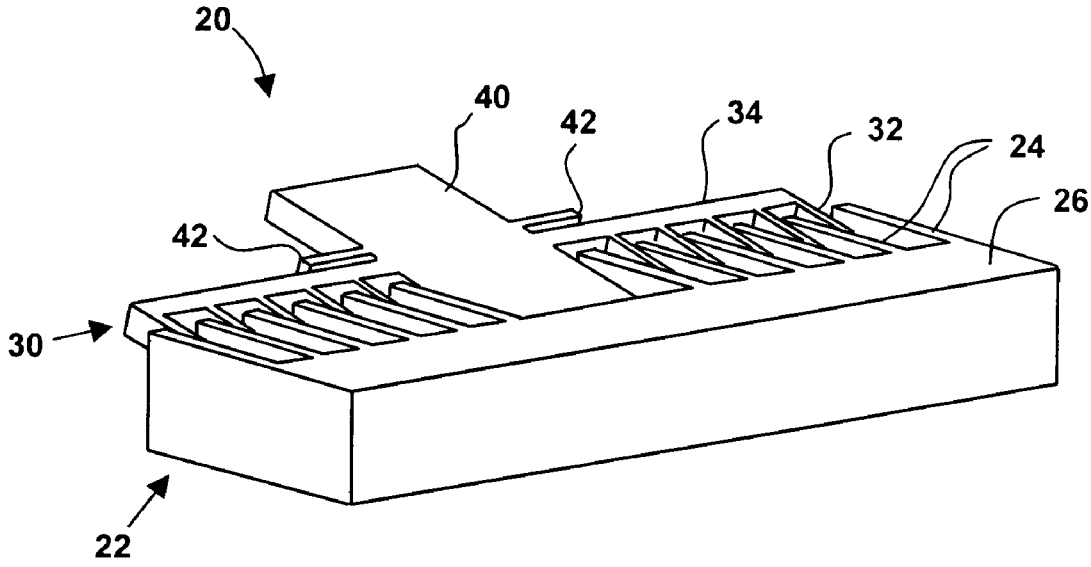

FIG. 2

(PRIOR ART)