Fig.15

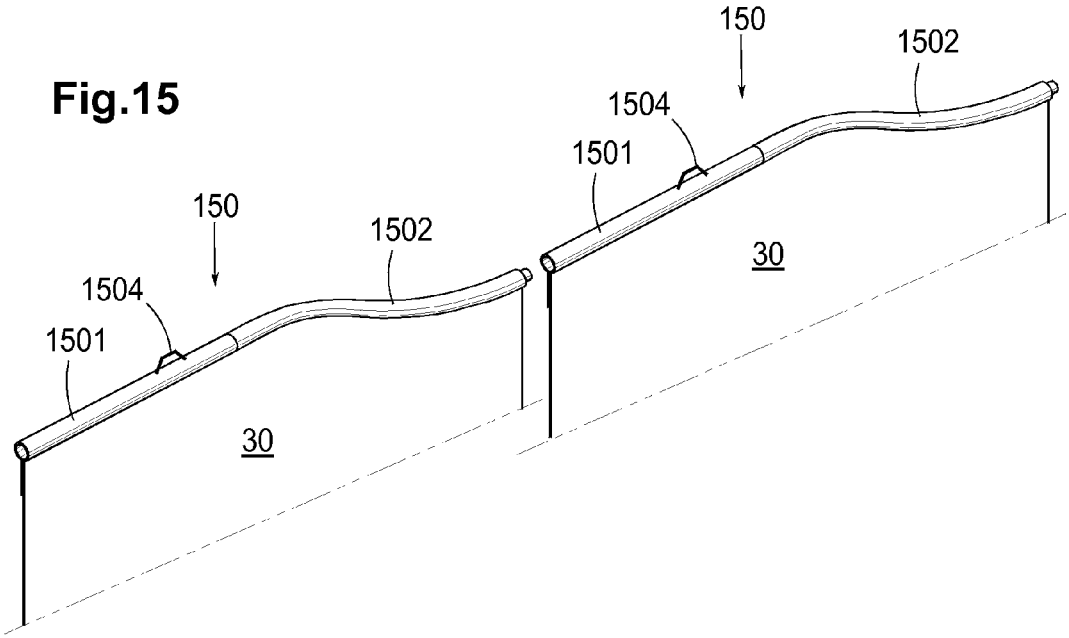
150
1502
1504
1501
30
150
1502
1504
1501
30

Fig.16

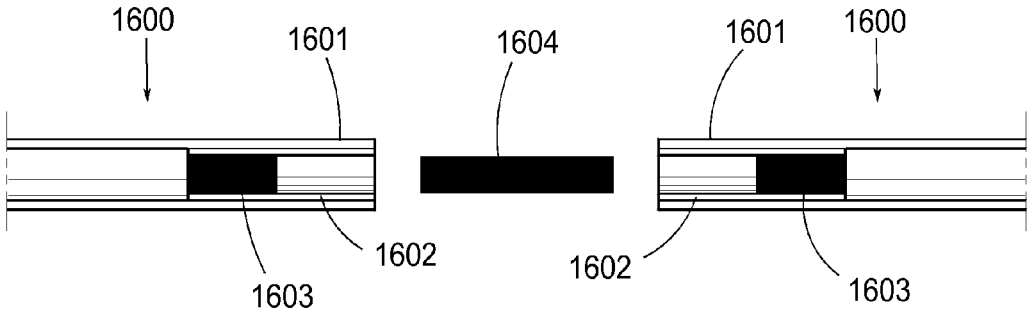
1600
1601
1604
1601
1600
1602
1603
1602
1603