# United States Patent [19]

**Inoue et al.**

[11] **Patent Number: 4,715,010**

[45] **Date of Patent: Dec. 22, 1987**


[54] **SCHEDULE ALARM DEVICE**


[75] Inventors: **Tomohiro Inoue; Shinji Tsugei; Shigeki Iguchi,** all of Nara, Japan

[73] Assignee: **Sharp Kabushiki Kaisha,** Osaka, Japan



[21] Appl. No.: **765,239**

[22] Filed: **Aug. 13, 1985**

[30] **Foreign Application Priority Data**

Aug. 14, 1984 [JP] Japan ..... 59-169563

[51] **Int. Cl.**[4] ..... **G06F 15/62;** G06F 3/02; G06F 3/14

[52] **U.S. Cl.** ..... **364/705;** 364/900; 368/43; 368/251

[58] **Field of Search** ..... 364/705, 707, 900; 368/12, 41, 42, 43, 63, 251



[56] **References Cited**

U.S. PATENT DOCUMENTS

4,117,542 9/1978 Klausner et al. ..... 364/900
4,276,541 6/1981 Inoue et al. ..... 364/900 X
4,279,022 7/1981 Abe ..... 364/900
4,362,392 12/1982 Kumata ..... 364/705 X
4,368,988 1/1982 Tahara et al. ..... 368/63
4,402,056 8/1983 Sado et al. ..... 364/705
4,459,036 7/1984 Sado et al. ..... 368/251 X



*Primary Examiner*—Felix D. Gruber
*Attorney, Agent, or Firm*—Birch, Stewart, Kolasch & Birch



[57] **ABSTRACT**

An easy to use schedule alarm is disclosed which is capable of sounding an alarm and displaying the content of a schedule or memorandum automatically without setting the alarm time or entering a data display instruction. With the scheduled data or memorandum being entered into the device in advance, it can notify the scheduled times by sounding an alarm and by displaying the contents of a schedule and memorandum thus serving to prevent one from leaving out scheduled times and data.

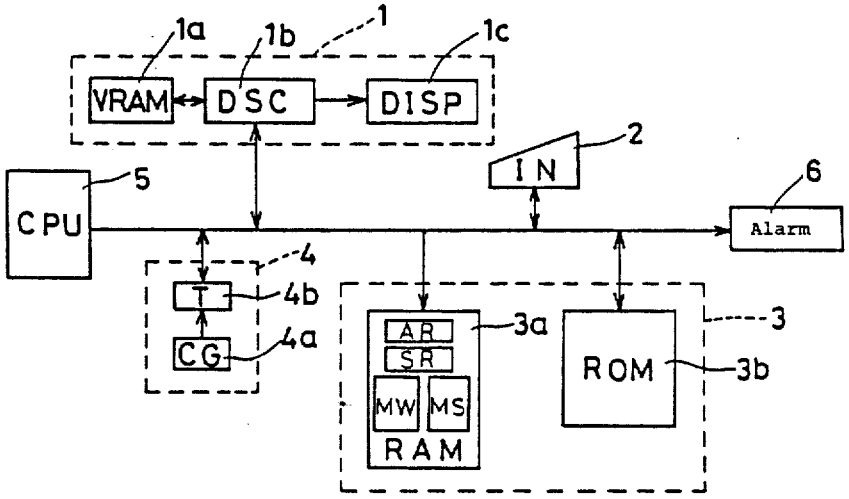
**2 Claims, 8 Drawing Figures**