US005911710A

United States Patent [19]

Barry et al.

[11] **Patent Number: 5,911,710**

[45] **Date of Patent: Jun. 15, 1999**

[54] **MEDICAL INSERTION DEVICE WITH HEMOSTATIC VALVE**

[75] Inventors: **Robert Barry**, Kirkland, Wash.; **Theodore Lamson**, Saratoga Springs, N.Y.; **Gregory Lambrecht**, Cos Cob, Conn.; **Michael Gertner**, West Long Branch, N.J.

[73] Assignee: **Schneider/Namic**, Glens Fall, N.Y.

[21] Appl. No.: **08/850,265**

[22] Filed: **May 3, 1997**

[51] **Int. Cl.**[6] **A61M 5/00**

[52] **U.S. Cl.** **604/249**; 604/537; 604/167

[58] **Field of Search** 604/246, 249, 604/256, 283, 164, 167, 169

[56] **References Cited**

U.S. PATENT DOCUMENTS

4,430,081	2/1984	Timmermans .	
4,580,573	4/1986	Quinn .	
4,626,245	12/1986	Weinstein .	
4,857,062	8/1989	Russell .	
4,895,346	1/1990	Steigerwald .	
4,929,235	5/1990	Merry et al. .	
4,978,341	12/1990	Niederhauser .	
4,978,344	12/1990	Dombrowski et al. .	
5,000,745	3/1991	Guest et al. .	
5,006,114	4/1991	Rogers et al. .	
5,041,095	8/1991	Littrell .	
5,051,109	9/1991	Simon .	
5,092,845	3/1992	Chang .	
5,092,846	3/1992	Nishijima et al. .	
5,098,406	3/1992	Sawyer .	
5,102,395	4/1992	Cheer et al. .	
5,106,054	4/1992	Mollenauer et al. .	
5,114,408	5/1992	Fleischhaker et al. .	
5,125,903	6/1992	McLaughlin et al. .	
5,127,626	7/1992	Hilal et al. .	
5,154,701	10/1992	Cheer et al. .	
5,167,637	12/1992	Okada et al. .	
5,176,652	1/1993	Littrell .	
5,195,980	3/1993	Catlin .	
5,205,829	4/1993	Lituchy .	
5,207,649	5/1993	Aruny .	
5,215,527	6/1993	Beck et al. .	
5,215,528	6/1993	Purdy et al. .	
5,256,150	10/1993	Quiachon et al. .	
5,267,966	12/1993	Paul .	
5,269,997	12/1993	Vetter et al. .	
5,273,546	12/1993	McLaughlin et al. .	
5,290,245	3/1994	Dennis .	
5,290,249	3/1994	Foster et al. .	
5,300,033	4/1994	Miller .	
5,304,142	4/1994	Liebl et al. .	
5,304,143	4/1994	Green et al. .	
5,304,156	4/1994	Sylvanowicz et al. .	
5,312,362	5/1994	Pfolsgraf et al. .	
5,312,363	5/1994	Ryan et al. .	
5,330,436	7/1994	Heidmueller .	
5,334,160	8/1994	Ellis .	
5,336,192	8/1994	Palestrant .	
5,350,362	9/1994	Stouder, Jr. .	
5,350,363	9/1994	Goode et al. .	
5,356,390	10/1994	Erskine .	
5,366,446	11/1994	Tal et al. .	
5,403,292	4/1995	Ju .	
5,458,640	10/1995	Gerrone	604/264
5,584,808	12/1996	Healy	604/86
5,591,137	1/1997	Stevens .	
5,599,305	2/1997	Hermann et al.	604/95

Primary Examiner—Corrine McDermott
Attorney, Agent, or Firm—Kenyon & Kenyon

[57] **ABSTRACT**

A medical insertion device that reduces the drag force exerted on an elongated member such as a catheter that is inserted through the device, increases maneuverability of the elongated member throughout the procedure in which the device is used and provides hemostasis. The device comprises a sheath housing and shuttle housing; the shuttle housing moves relative to the sheath housing. An elastomeric valve that contains an openable radial slit is provided in the sheath housing and provides hemostasis until the shuttle housing is biased towards the sheath housing. When the shuttle housing is biased forward, a generally tubular shuttle tube in the shuttle housing opens the slit in the elastomeric valve. The device is constructed so that, within the shuttle housing, hemostasis is provided after the shuttle tube has biased the elastomeric valve open.
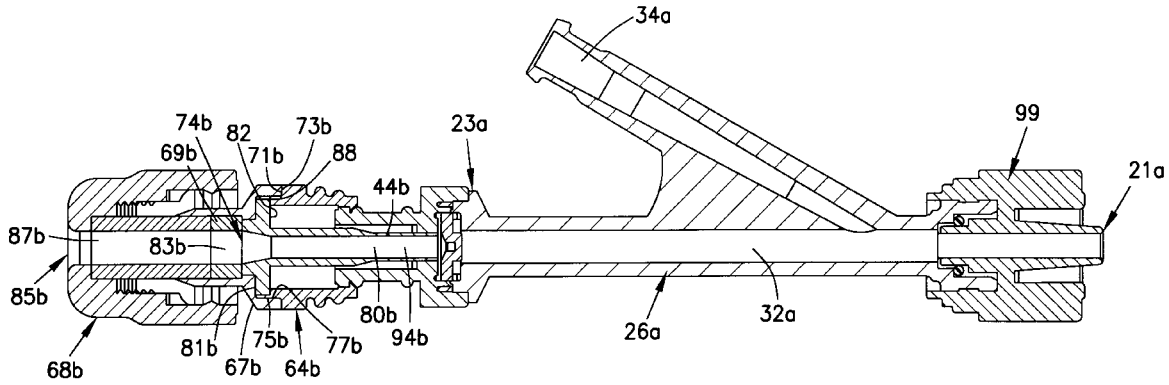
17 Claims, 10 Drawing Sheets