US009410610B1

(12) **United States Patent**
Pritchard et al.

(10) **Patent No.: US 9,410,610 B1**
(45) **Date of Patent: Aug. 9, 2016**

(54) **ECO MODE E-ASSIST**

(71) Applicant: **BorgWarner Inc.**, Auburn Hills, MI (US)

(72) Inventors: **Larry A. Pritchard**, Macomb, MI (US); **Thaddeus Kopp**, Oakland Township, MI (US)

(73) Assignee: **BorgWarner Inc.**, Auburn Hills, MI (US)

(*) Notice: Subject to any disclaimer, the term of this patent is extended or adjusted under 35 U.S.C. 154(b) by 0 days.

(21) Appl. No.: **14/824,724**

(22) Filed: **Aug. 12, 2015**

(51) **Int. Cl.**
F16H 57/04 (2010.01)

(52) **U.S. Cl.**
CPC ***F16H 57/0483*** (2013.01); ***F16H 57/045*** (2013.01); ***F16H 57/0476*** (2013.01); ***F16H 57/0482*** (2013.01); *F16H 57/0434* (2013.01); *F16H 57/0435* (2013.01)

(58) **Field of Classification Search**
None
See application file for complete search history.

(56) **References Cited**

U.S. PATENT DOCUMENTS

5,259,194 A * 11/1993 Okada B60K 17/14 475/83
2006/0223670 A1* 10/2006 Nishikawa B60K 6/387 477/168
2007/0074949 A1* 4/2007 Yoshioka F16D 43/284 192/85.02
2011/0192245 A1* 8/2011 Shioiri F16H 57/0423 74/467
2012/0091835 A1* 4/2012 Kim B60K 6/26 310/54
2012/0091836 A1* 4/2012 Hayashi F16H 57/0412 310/54
2012/0286607 A1* 11/2012 Shimizu F16H 57/0483 310/90
2013/0305878 A1* 11/2013 Seno ..... F16H 57/0423 74/665 A
2014/0262675 A1* 9/2014 Sugiyama F16H 57/0445 192/85.01

OTHER PUBLICATIONS

U.S. Appl. No. 14/824,675, filed Aug. 12, 2015; Title: E-Assist With Torque Vectoring ; First named inventor: Larry A. Pritchard.
U.S. Appl. No. 14/811,880, filed Jul. 29, 2015 ;Title: Two Motor e-Assist AWD ; First named inventor: Larry A. Pritchard.
U.S. Appl. No. 14/824,595, filed Aug. 12, 2015: Title: Elecrtic Drive System ; First named inventor: Larry A. Pritchard.

* cited by examiner

Primary Examiner — Justin Holmes
(74) *Attorney, Agent, or Firm* — BrooksGroup

(57) **ABSTRACT**

A product may include a differential unit, and an electrical machine may be interconnected with the differential unit. The differential unit and the electrical machine may be lubricated by a fluid. A reservoir may be defined above the electrical machine. The reservoir may receive the fluid during operation of the differential unit and may selectively store and release the fluid.
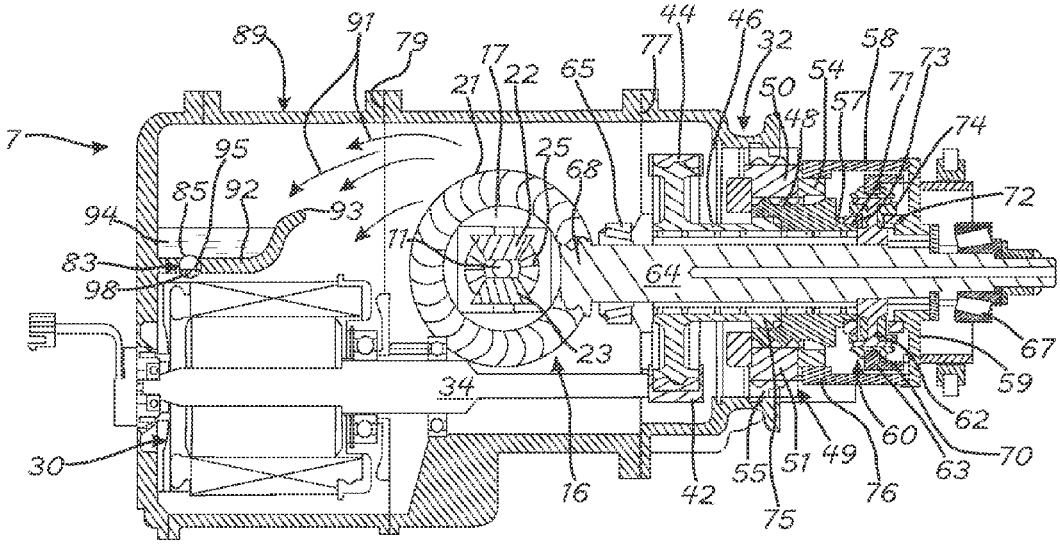
20 Claims, 2 Drawing Sheets