US009510510B2

(12) **United States Patent**
Holz et al.

(10) **Patent No.: US 9,510,510 B2**
(45) **Date of Patent: Dec. 6, 2016**

(54) **MATERIAL COLLECTION SYSTEM SENSOR**

(71) Applicant: **Deere & Company**, Moline, IL (US)

(72) Inventors: **William J Holz**, Hartford, WI (US); **Patrick J Shaver**, Eden Prairie, MN (US); **Christopher A Krajnik**, Eden Prairie, MN (US)

(73) Assignee: **DEERE & COMPANY**, Moline, IL (US)

(*) Notice: Subject to any disclaimer, the term of this patent is extended or adjusted under 35 U.S.C. 154(b) by 613 days.

(21) Appl. No.: **13/934,422**

(22) Filed: **Jul. 3, 2013**

(65) **Prior Publication Data**

US 2015/0007546 A1 Jan. 8, 2015

(51) **Int. Cl.**
A01D 46/06 (2006.01)
A01D 43/063 (2006.01)

(52) **U.S. Cl.**
CPC ***A01D 43/0631*** (2013.01)

(58) **Field of Classification Search**
CPC A01D 43/063
USPC ..... 56/10.2 R, 16.6, 202, 203
See application file for complete search history.

(56) **References Cited**

U.S. PATENT DOCUMENTS

4,782,650 A 11/1988 Walker
4,835,951 A 6/1989 Walker
4,964,266 A 10/1990 Kolb
4,969,320 A 11/1990 Langford
4,981,011 A 1/1991 Olejak
5,321,939 A 6/1994 Fuse et al.
5,388,394 A 2/1995 Heismann
5,605,033 A 2/1997 Olmr
5,775,077 A 7/1998 Olmr
5,832,708 A 11/1998 Sugden
5,950,408 A 9/1999 Schaedler
5,960,613 A 10/1999 Mixon et al.
6,038,843 A 3/2000 Sebben et al.
6,073,432 A 6/2000 Schaedler
6,272,818 B1 8/2001 Sebben et al.
6,622,465 B2 9/2003 Jerome et al.
7,448,192 B2 11/2008 Umemoto et al.
8,006,473 B2 8/2011 Kuramoto et al.
2009/0320433 A1* 12/2009 Kuramoto et al. 56/202

FOREIGN PATENT DOCUMENTS

EP 2020173 A1 4/2009

* cited by examiner

Primary Examiner — Robert Pezzuto
Assistant Examiner — Mai Nguyen

(57) **ABSTRACT**

A material collection system sensor includes a paddle pivotably mounted to a tunnel on a collection container floor. The forward end of the paddle is adjacent a front of the collection container and the rearward end is adjacent a rear of the collection container. A switch mounted to the tunnel under the paddle has an actuator extending above the tunnel that is actuatable by downward pivotal movement of the paddle. A sensitivity adjuster attached to the tunnel under the paddle has a sensitivity adjustment knob outside the collection container which compresses or relaxes a spring extending upwardly against the paddle.
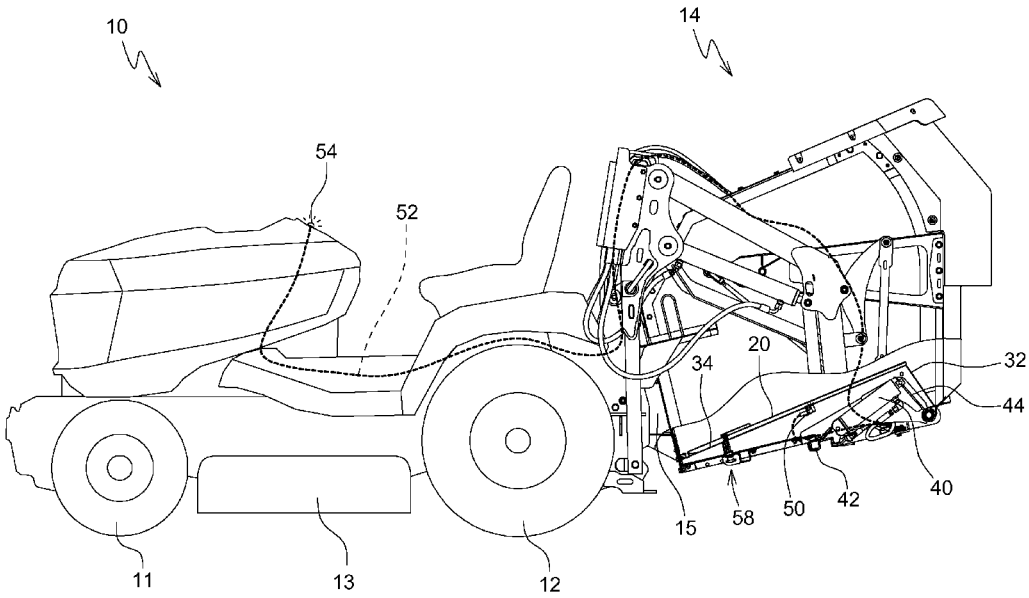
6 Claims, 6 Drawing Sheets