US009409610B2

(12) **United States Patent**
Baker et al.

(10) **Patent No.: US 9,409,610 B2**
(45) **Date of Patent: Aug. 9, 2016**

(54) **SIDE SKIRT SYSTEM FOR A TRAILER**

(71) Applicant: **Wabash National, L.P.**, Lafayette, IN (US)

(72) Inventors: **Leonard W. Baker**, Lafayette, IN (US); **Michael J. Courtney**, Dayton, IN (US); **Gustavo Lazatin Sumcad**, Westfield, IN (US); **James Andrew Sweet**, Lafayette, IN (US)

(73) Assignee: **Wabash National, L.P.**, Lafayette, IN (US)

(*) Notice: Subject to any disclaimer, the term of this patent is extended or adjusted under 35 U.S.C. 154(b) by 0 days.

(21) Appl. No.: **14/644,508**

(22) Filed: **Mar. 11, 2015**

(65) **Prior Publication Data**

US 2015/0259014 A1 Sep. 17, 2015

Related U.S. Application Data

(60) Provisional application No. 61/993,692, filed on May 15, 2014, provisional application No. 61/951,338, filed on Mar. 11, 2014.

(51) **Int. Cl.**
B62D 35/02 (2006.01)
B62D 35/00 (2006.01)

(52) **U.S. Cl.**
CPC ***B62D 35/02*** (2013.01); ***B62D 35/001*** (2013.01); ***B62D 35/008*** (2013.01)

(58) **Field of Classification Search**
CPC .. B62D 35/001; B62D 35/002; B62D 35/007; B62D 35/008; B62D 35/02
USPC 296/180.1, 180.4, 180.5
See application file for complete search history.

(56) **References Cited**

U.S. PATENT DOCUMENTS

357,800	A	2/1887	Wescott
495,801	A	4/1893	Henthorne
564,027	A	7/1896	Pratt
824,541	A	6/1906	Hager et al.
1,127,241	A	2/1915	Hawksworth
2,318,863	A	5/1943	Jabelmann
2,737,411	A	3/1956	Potter
3,256,655	A	6/1966	Teter
3,401,953	A	9/1968	Prohl et al.
3,483,939	A	12/1969	Maddock et al.
3,608,928	A	9/1971	Hooker
3,711,146	A	1/1973	Madzsar et al.

(Continued)

FOREIGN PATENT DOCUMENTS

EP	0 738 621	A1	10/1996
EP	0 857 620	A1	8/1998
IN	03/093066	A1	11/2012

OTHER PUBLICATIONS

Office action in U.S. Appl. No. 13/413,998 dated Nov. 2, 2012 (9 pages).

(Continued)

Primary Examiner — Jason S Daniels
(74) *Attorney, Agent, or Firm* — Carli E. Stewart

(57) **ABSTRACT**

A side skirt system for reducing drag on a trailer or other ground vehicle includes plurality of wall panels each configured to be coupled to one side of the trailer to extend generally below a storage container of the trailer at least partially along a length of the trailer. The wall panels are horizontally spaced-apart from each other.
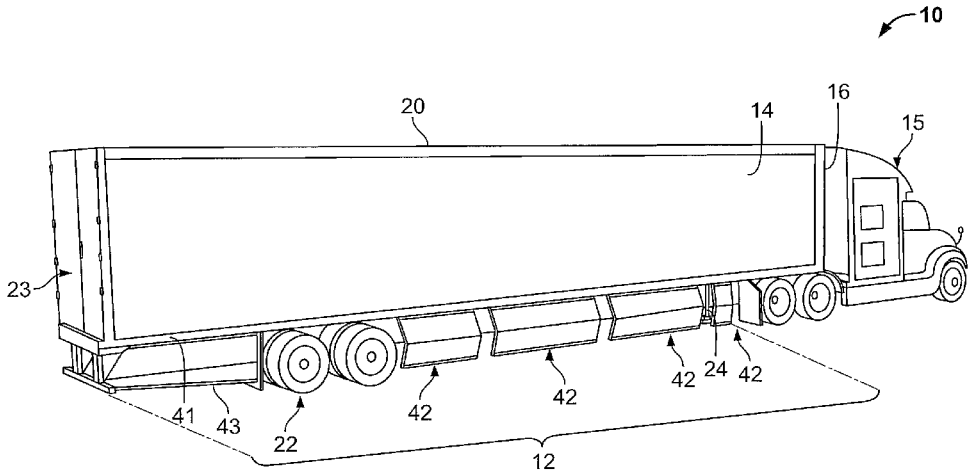
13 Claims, 33 Drawing Sheets