US009409110B2

(12) **United States Patent**
Urmenyi et al.

(10) **Patent No.: US 9,409,110 B2**
(45) **Date of Patent: Aug. 9, 2016**

(54) **METHOD OF MAINTAINING WATER QUALITY IN A PROCESS STREAM**

(75) Inventors: **Ana-Mariana Urmenyi**, Utrecht (NL); **Amit Gupta**, Aurora, IL (US); **Chris D. Davies**, Frodsham (GB); **Bert Simons**, Amstelveen (NL)

(73) Assignee: **NALCO COMPANY**, Naperville, IL (US)

(*) Notice: Subject to any disclaimer, the term of this patent is extended or adjusted under 35 U.S.C. 154(b) by 879 days.

(21) Appl. No.: **13/183,069**

(22) Filed: **Jul. 14, 2011**

(65) **Prior Publication Data**

US 2013/0015137 A1 Jan. 17, 2013

(51) **Int. Cl.**
B01D 37/04 (2006.01)
C02F 1/00 (2006.01)
(Continued)

(52) **U.S. Cl.**
CPC ***B01D 37/04*** (2013.01); ***B01D 37/041*** (2013.01); ***B01D 37/043*** (2013.01); ***B01D 37/045*** (2013.01); ***B01D 37/046*** (2013.01); ***B01D 37/048*** (2013.01); *C02F 1/001* (2013.01); *C02F 1/008* (2013.01); *C02F 1/32* (2013.01); *C02F 1/38* (2013.01); *C02F 1/441* (2013.01); *C02F 1/444* (2013.01); *C02F 2103/023* (2013.01); *C02F 2209/001* (2013.01); *C02F 2209/005* (2013.01); *C02F 2209/006* (2013.01); *C02F 2209/008* (2013.01); *C02F 2209/02* (2013.01);
(Continued)

(58) **Field of Classification Search**
CPC C02F 1/001; C02F 1/008; C02F 1/444; C02F 2103/23; C02F 2209/001; C02F 2209/005; C02F 1/32; C02F 1/38; C02F 1/441; C02F 2209/06; C02F 2209/105; C02F 2209/20; C02F 2209/445; C02F 2209/048; C02F 2209/008; C02F 2209/02; C02F 2209/03; C02F 2209/04; C02F 2209/05; C02F 2209/10; C02F 2209/11; C02F 2209/36; C02F 2209/40; C02F 2301/046; C02F 2301/043; B01D 61/12; B01D 37/00–37/048
See application file for complete search history.

(56) **References Cited**

U.S. PATENT DOCUMENTS

4,793,932 A 12/1988 Ford et al.
4,931,187 A 6/1990 Derham et al.
(Continued)

FOREIGN PATENT DOCUMENTS

CN 2910899 Y 6/2007
DE 20 2010 012271 11/2010
(Continued)

OTHER PUBLICATIONS

Hydranautics Membrane element CPA2 specification p. Jul. 2009.*
(Continued)

Primary Examiner — Lucas Stelling
(74) *Attorney, Agent, or Firm* — Eric D. Babych; Brinks Gilson & Lione

(57) **ABSTRACT**

Disclosed and claimed is a method of removing contaminants from a process stream or stabilizing a system parameter in the process stream. The method includes providing a filtration system in communication with a controller, wherein the controller is operable to automatically initiate a flow from the process stream into the filtration system when the system parameter of the process stream is within above an upper threshold value and/or below a lower threshold value; and activating the filtration system, wherein the flow comprises a flow rate through the filtration system and the controller is operable to adjust the flow rate.
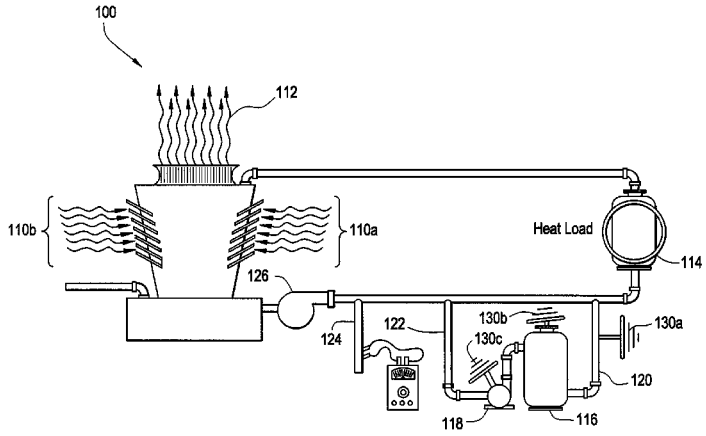
2 Claims, 2 Drawing Sheets