Aug. 24, 1965 H. V. TIBBETS 3,202,310

HINGE AND LATCH ASSEMBLY

Filed May 10, 1963 2 Sheets-Sheet 1

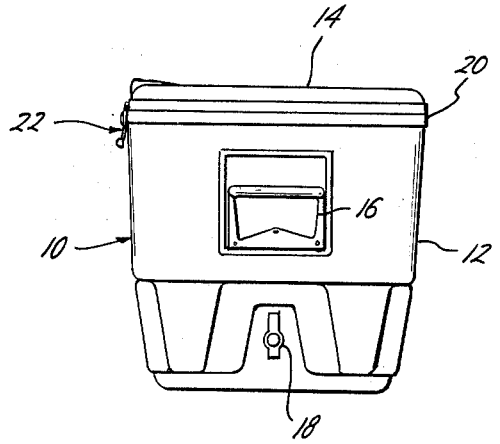

Fig. 1

Fig. 2

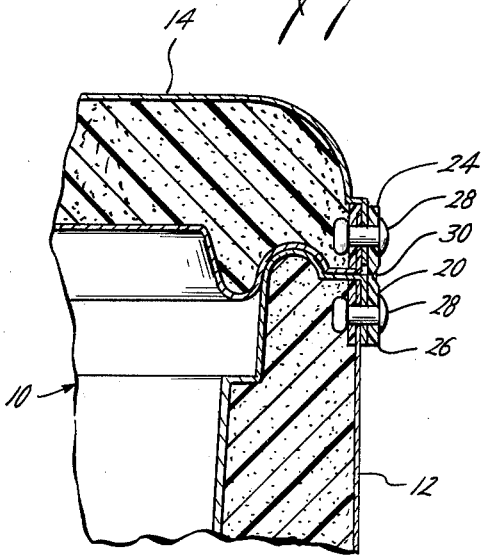

Fig. 3

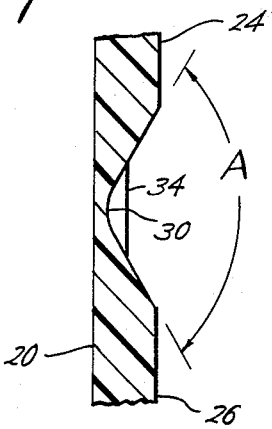

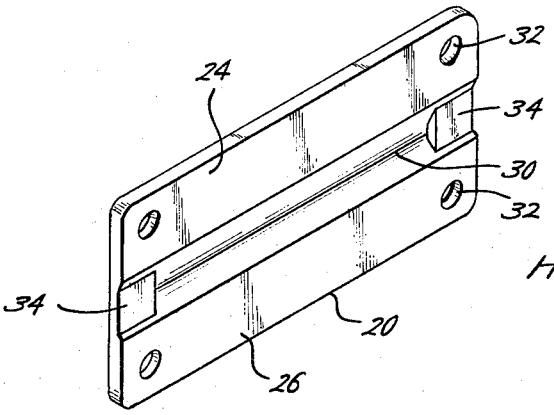

Fig. 4

Harold V. Tibbets
INVENTOR.

BY James F Weiler
Jefferson D Gillen
William A Stout
Paul L DeVerter
ATTORNEYS