US005100410A

United States Patent [19]

Dulebohn

[11] **Patent Number: 5,100,410**

[45] **Date of Patent: Mar. 31, 1992**

[54] **MEANS AND METHOD FOR FACILITATING FOLDING OF AN INTRAOCULAR LENS**

[75] Inventor: **David H. Dulebohn**, Tonka Bay, Minn.

[73] Assignee: **Andrew Tool Co., Inc.**, Tonka Bay, Minn.

[21] Appl. No.: **647,517**

[22] Filed: **Jan. 28, 1991**

[51] **Int. Cl.**[5] **A61B 17/00**

[52] **U.S. Cl.** **606/107**; 623/6; 206/5.1

[58] **Field of Search** 623/6; 606/107; 206/5.1, 438

[56] **References Cited**

U.S. PATENT DOCUMENTS

450,266	4/1891	Truax	294/992
1,837,277	12/1931	Lund	606/110
4,198,980	4/1980	Clark	606/107
4,303,268	12/1981	Davidson	294/992
4,325,375	4/1982	Nevyas	606/207
4,462,404	7/1984	Schwarz et al.	606/142
4,573,998	3/1986	Mazzocco	623/6
4,681,102	7/1987	Bartell	606/107
4,702,244	10/1987	Mazzocco	623/6
4,759,359	7/1988	Willis et al.	606/107
4,769,034	9/1988	Poley	623/6
4,785,810	11/1988	Baccala et al.	606/207
4,791,924	12/1988	Kelman	128/303 R
4,813,956	3/1989	Gupta	623/6
4,813,957	3/1989	McDonald	623/6
4,836,201	6/1989	Patton et al.	623/6
4,844,065	7/1989	Faulkner	128/321

FOREIGN PATENT DOCUMENTS

WO82/01646	5/1982	PCT Int'l Appl. .
2191439A	12/1987	United Kingdom .

OTHER PUBLICATIONS

"Intracameral Lenses Made of Hydrocolloid Acrylates", by Dreifus, Wichterle and Lim, of II. Eye Clinic, Charles University from Sc. oftamologie 16(2), 454–459 (1960) (translation from Czech).

"Folding and Inserting Silicon Intraocular Lens Implants", by Gerald D. Faulkner M.D., *J. Cataract Refract Surf*, vol. 13, Nov. 1987, pp. 678–681.

"Pathologic Findings of an Explanted Silicone Intraocular Lens", by Newman, McIntyre, Apple, Deacon, Popham, and Isenberg; *J Cataract Refract Surg*, vol. 12, May 1986, pp. 292–297.

Primary Examiner—Randy C. Shay

[57] **ABSTRACT**

A system for facilitating folding a soft intraocular lens. A supporting and positioning structure associated with a base or frame presents the lens so that forceps tips are automatically positioned near opposite sides of the lens and maintained in that position. A forming means automatically moves the forceps tips with respect to the lens to fold the optic portion of the lens within the tips. The lens is accurately and reliably folded in the forceps tips to securely grip the lens in a desired position with reduced risk of damage to the optic portion of the lens.
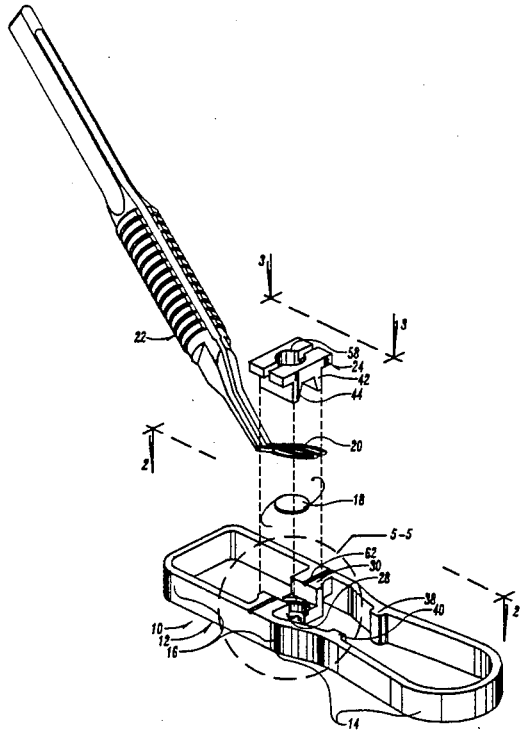
21 Claims, 4 Drawing Sheets