US007899309B2

(12) **United States Patent**
Whyatt et al.

(10) **Patent No.: US 7,899,309 B2**
(45) **Date of Patent: Mar. 1, 2011**

(54) **APPARATUS FOR VAPORIZATION OF LIQUID**

(75) Inventors: **Greg A. Whyatt**, Richland, WA (US); **Michael R. Powell**, Richland, WA (US)

(73) Assignee: **Battelle Memorial Institute**, Richland, WA (US)

(*) Notice: Subject to any disclaimer, the term of this patent is extended or adjusted under 35 U.S.C. 154(b) by 1051 days.

(21) Appl. No.: **11/674,975**

(22) Filed: **Feb. 14, 2007**

(65) **Prior Publication Data**

US 2008/0193112 A1 Aug. 14, 2008

(51) **Int. Cl.**
B01D 3/06 (2006.01)

(52) **U.S. Cl.** **392/399**; 392/386; 392/307; 392/397

(58) **Field of Classification Search** ..... None
See application file for complete search history.

(56) **References Cited**

U.S. PATENT DOCUMENTS

3,566,615	A *	3/1971	Roeder, Jr.	62/511
3,584,194	A *	6/1971	Kautz et al.	392/484
3,854,032	A *	12/1974	Cooper	219/383
4,465,922	A *	8/1984	Kolibas	392/484
4,480,172	A *	10/1984	Ciciliot et al.	392/396
5,265,318	A *	11/1993	Shero	29/447
6,343,416	B1 *	2/2002	Miller et al.	29/890.035
7,756,404	B2 *	7/2010	Schubert et al.	392/478
2004/0124259	A1	7/2004	Guezennec et al.	
2008/0089676	A1 *	4/2008	Schubert et al.	392/478

FOREIGN PATENT DOCUMENTS

WO 99/95452 2/1999

OTHER PUBLICATIONS

PCT International Search Report and Written Opinion.

* cited by examiner

Primary Examiner—Thor S Campbell
(74) *Attorney, Agent, or Firm*—Allan C. Tuan

(57) **ABSTRACT**

Apparatus for vaporizing liquid in a vaporization pathway having an actively controlled temperature are disclosed according to some aspects. The apparatus can comprise a first body having a cross sectional shape and dimensions substantially equal to the cross sectional shape and dimensions of a cavity in a second body, which allows the first body to be non-permanently inserted into the second body. The outer surface of the first body, the inner surface forming the cavity in the second body, or both can be modified to create a vaporization pathway between the first and second bodies when the surfaces mate and/or align. The liquid vaporizer can further comprise a vaporization pathway inlet for fluid comprising liquid, a vaporization pathway outlet for fluid comprising primarily vapor, and a heater in thermal communication with the first body, the second body, or both. The heater provides active control of the temperature of the vaporization pathway.
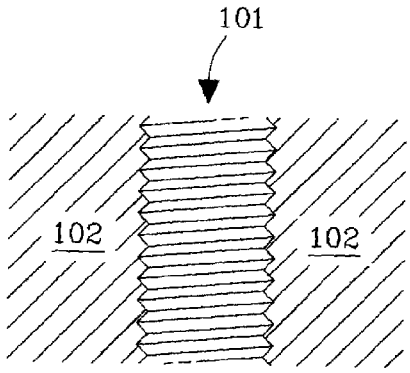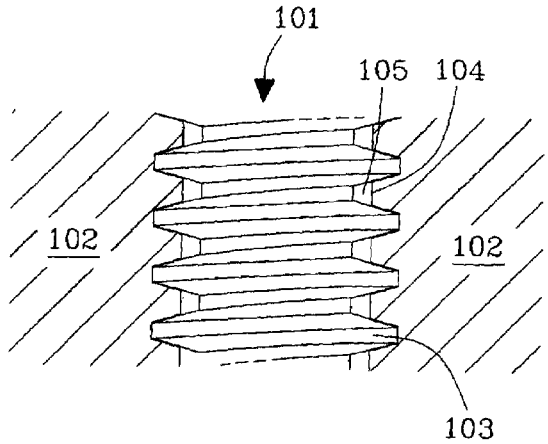
21 Claims, 4 Drawing Sheets