US008398709B2

(12) **United States Patent**
Ben Nun

(10) **Patent No.: US 8,398,709 B2**
(45) **Date of Patent: Mar. 19, 2013**

(54) **ACCOMMODATING INTRAOCULAR LENS (AIOL) CAPSULES**

(75) Inventor: **Joshua Ben Nun**, D.N. Vitkin (IL)

(73) Assignee: **Nulens Ltd.**, Herzliya Pituah (IL)

(*) Notice: Subject to any disclaimer, the term of this patent is extended or adjusted under 35 U.S.C. 154(b) by 159 days.

(21) Appl. No.: **13/001,597**

(22) PCT Filed: **Jul. 26, 2009**

(86) PCT No.: **PCT/IL2009/000728**

§ 371 (c)(1),
(2), (4) Date: **Dec. 27, 2010**

(87) PCT Pub. No.: **WO2010/010565**

PCT Pub. Date: **Jan. 28, 2010**

(65) **Prior Publication Data**

US 2011/0112636 A1 May 12, 2011

(30) **Foreign Application Priority Data**

Jul. 24, 2008 (IL) 193021
Mar. 22, 2009 (IL) 197742

(51) **Int. Cl.**
A61F 2/16 (2006.01)

(52) **U.S. Cl.** **623/6.37**

(58) **Field of Classification Search** 623/4.1, 623/6.11, 6.13, 6.22, 6.37
See application file for complete search history.

(56) **References Cited**

U.S. PATENT DOCUMENTS

3,950,082 A 4/1976 Volk
4,122,556 A 10/1978 Poler
4,254,509 A 3/1981 Tennant
4,298,994 A 11/1981 Clayman
4,340,979 A 7/1982 Kelman
4,409,690 A 10/1983 Gess
4,409,691 A 10/1983 Levy
4,445,998 A 5/1984 Kanda et al.
4,446,581 A 5/1984 Blake
4,494,254 A 1/1985 Lopez
4,530,117 A 7/1985 Kelman
RE31,963 E 8/1985 Kelman
4,556,998 A 12/1985 Siepser

(Continued)

FOREIGN PATENT DOCUMENTS

EP 0 156 472 A 10/1985
EP 0637503 B1 10/1998

(Continued)

OTHER PUBLICATIONS

Chu, Ralph Y. and Buliano, Megan, Accommodating IOLS by Ralph Chu et al, Cataract & Refractive Surgery Today, May 2004.

(Continued)

Primary Examiner — William H. Matthews
Assistant Examiner — Howie Matthews
(74) *Attorney, Agent, or Firm* — Morgan, Lewis & Bockius LLP

(57) **ABSTRACT**

Accommodating intraocular lens (AIOL) capsules having a continuously variable Diopter strength between a first Diopter strength in a non-compressed state and a second Diopter strength different than its first Diopter strength in a compressed state. The AIOL capsules include an anterior capsule plate, a posterior capsule plate, and a capsule ring for bounding a hermetic cavity filled with a capsule filling. The anterior capsule plate is intended to anteriorly bulge along the human eye's visual axis on application of an axial compression force against the posterior capsule plate from a posterior direction.
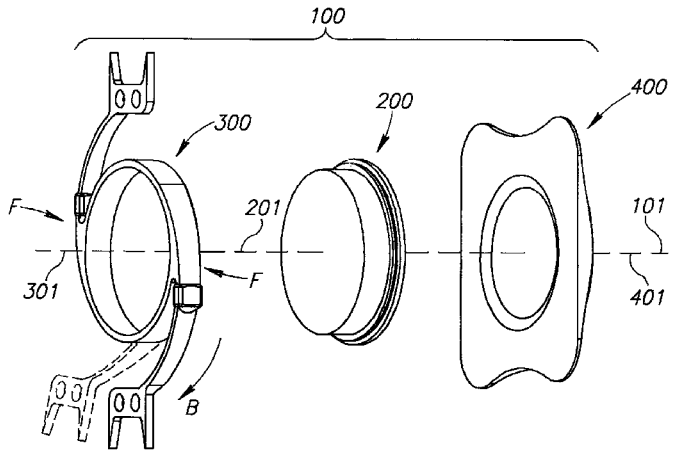
10 Claims, 14 Drawing Sheets