Feb. 24, 1970 L. BENNETT, JR 3,496,909

DRY WALL TAPE DISPENSER

Filed June 17, 1966

Fig. 1

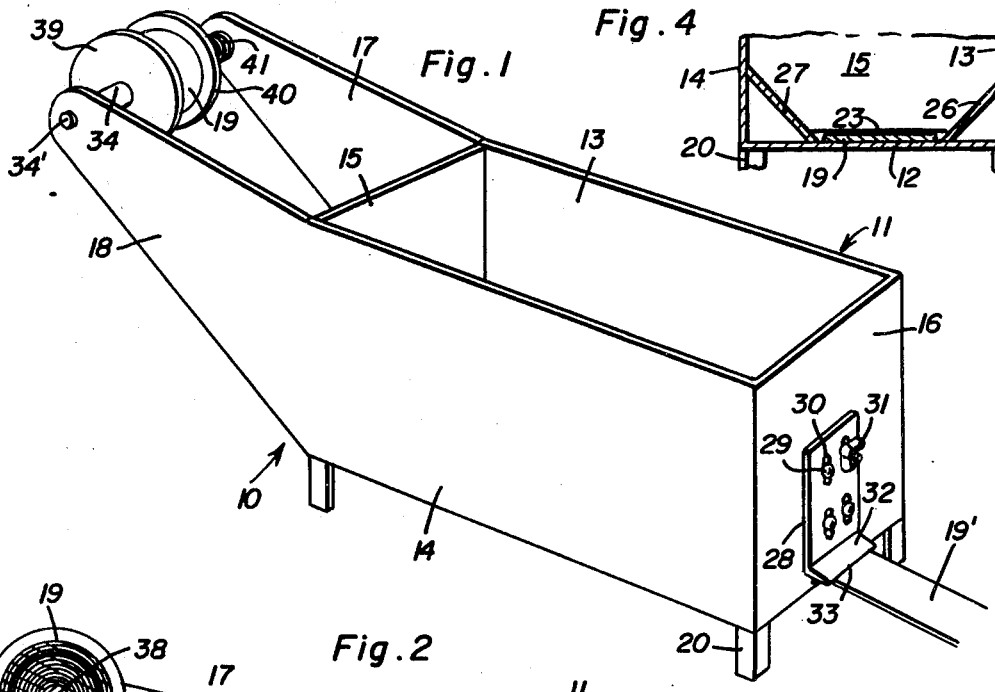

Fig. 4

Fig. 2

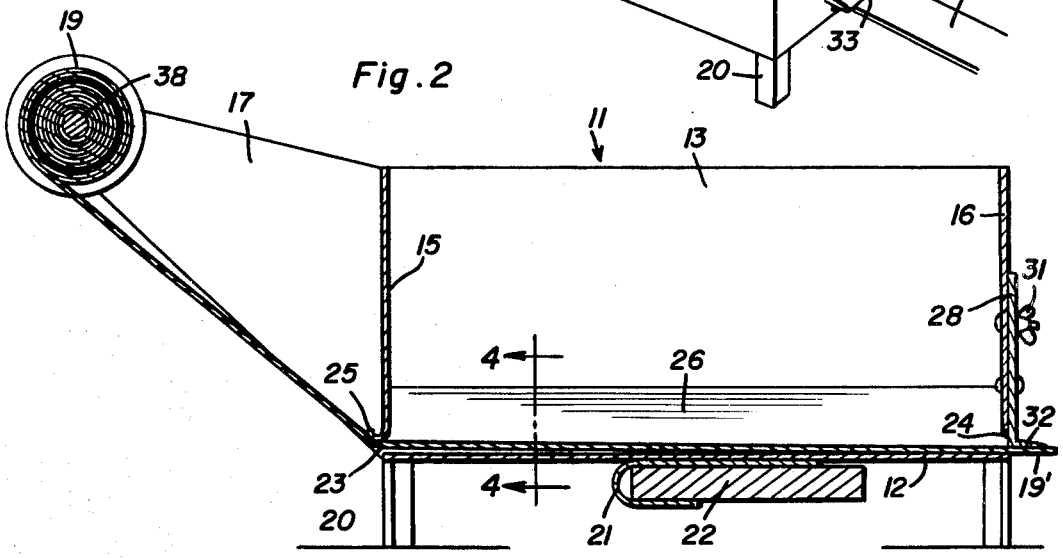

Fig. 3

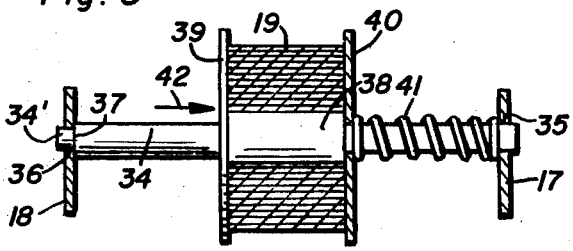

Luther Bennett, Jr.

INVENTOR.

BY Clarence A. O'Brien and Harvey B. Jacobson Attorneys