# United States Patent [19]

**Shinmi et al.**

[11] **4,296,309**

[45] **Oct. 20, 1981**


[54] **THERMAL HEAD**


[75] Inventors: **Akira Shinmi**, Kawasaki; **Masahisa Fukui**, Yokohama; **Toshitami Hara**, Tokyo; **Yoshiaki Shirato**, Yokohama; **Yoshioki Hajimoto**, Chofu, all of Japan

[73] Assignee: **Canon Kabushiki Kaisha**, Tokyo, Japan



[21] Appl. No.: **906,359**

[22] Filed: **May 15, 1978**

[30] **Foreign Application Priority Data**

| | | | |
|---|---|---|---|
| May 19, 1977 | [JP] | Japan | 52-57936 |
| Aug. 30, 1977 | [JP] | Japan | 52-103975 |
| Sep. 7, 1977 | [JP] | Japan | 52-107522 |
| Sep. 16, 1977 | [JP] | Japan | 52-111329 |
| Oct. 13, 1977 | [JP] | Japan | 52-122622 |
| Oct. 13, 1977 | [JP] | Japan | 52-122623 |
| Oct. 13, 1977 | [JP] | Japan | 52-122624 |
| Oct. 13, 1977 | [JP] | Japan | 52-122625 |
| Oct. 28, 1977 | [JP] | Japan | 52-129482 |
| Oct. 28, 1977 | [JP] | Japan | 52-129483 |
| Oct. 28, 1977 | [JP] | Japan | 52-129484 |
| Oct. 28, 1977 | [JP] | Japan | 52-129485 |
| Oct. 28, 1977 | [JP] | Japan | 52-129486 |
| Oct. 31, 1977 | [JP] | Japan | 52-131260 |
| Oct. 31, 1977 | [JP] | Japan | 52-131261 |
| Oct. 31, 1977 | [JP] | Japan | 52-131262 |
| Dec. 28, 1977 | [JP] | Japan | 52-160137 |
| Dec. 28, 1977 | [JP] | Japan | 52-160138 |
| Dec. 28, 1977 | [JP] | Japan | 52-160139 |
| Dec. 28, 1977 | [JP] | Japan | 52-160140 |
| Dec. 28, 1977 | [JP] | Japan | 52-160143 |
| Dec. 28, 1977 | [JP] | Japan | 52-160144 |
| Dec. 28, 1977 | [JP] | Japan | 52-160145 |
| Dec. 28, 1977 | [JP] | Japan | 52-160146 |
| Dec. 28, 1977 | [JP] | Japan | 52-160147 |
| Dec. 28, 1977 | [JP] | Japan | 52-160148 |
| Dec. 28, 1977 | [JP] | Japan | 52-160149 |
| Jan. 9, 1978 | [JP] | Japan | 53-1033 |
| Jan. 9, 1978 | [JP] | Japan | 53-1034 |
| Jan. 9, 1978 | [JP] | Japan | 53-1035 |
| Jan. 11, 1978 | [JP] | Japan | 53-1806 |
| Feb. 10, 1978 | [JP] | Japan | 53-14282 |
| Feb. 10, 1978 | [JP] | Japan | 53-14283 |

[51] **Int. Cl.**[3] ..... **H05B 1/00**

[52] **U.S. Cl.** ..... **219/216**; 219/543; 338/306

[58] **Field of Search** ..... 338/306, 307, 308, 309; 219/216, 543; 346/76PH



[56] **References Cited**

U.S. PATENT DOCUMENTS

| | | | |
|---|---|---|---|
| 3,240,625 | 3/1966 | Collins | 338/308 X |
| 3,503,801 | 3/1970 | Huang et al. | 338/308 X |
| 3,931,492 | 1/1976 | Takano et al. | 219/543 X |
| 3,973,106 | 8/1976 | Ura | 219/216 |
| 4,007,352 | 2/1976 | Ura | 338/308 X |
| 4,017,712 | 4/1977 | Baraff et al. | 219/216 |
| 4,038,517 | 7/1977 | Nelson | 338/308 X |
| 4,073,971 | 2/1978 | Yasujima et al. | 338/307 X |
| 4,129,848 | 12/1978 | Frank et al. | 338/308 |
| 4,136,274 | 1/1979 | Shibata et al. | 219/543 X |
| 4,169,032 | 9/1979 | Haase et al. | 219/216 X |
| 4,194,108 | 3/1980 | Nakajima et al. | 219/543 X |

FOREIGN PATENT DOCUMENTS

| | | | |
|---|---|---|---|
| 715691 | 8/1965 | Canada | 338/308 |

OTHER PUBLICATIONS

Brady, *Materials Handbook*, Ninth Edition, McGraw-Hill Book Comp., New York, 1956, pp. 630-631.

Shibata et al., IEEE Transactions on Parts, Hybrids and Packaging, "New type thermal printing head using thin film", vol. PHP-12, No. 3, pp. 223-230, Sep. 1976.



*Primary Examiner*—C. L. Albritton

*Attorney, Agent, or Firm*—Fitzpatrick, Cella, Harper & Scinto



[57] **ABSTRACT**

A thermal head of the present invention is composed of a substrate, a resistive heater element formed on the substrate, and electrically conductive members to supply electric power to the resistive heater element, wherein the resistive heater element contains a metal boride as the principal constituent. The thermal head of this construction is capable of selecting its resistivity to a high value and causing a large electric current to flow in the form of short pulses for the purpose of high speed printing, hence it is stable against repetitive pulse applications over a long period of time.

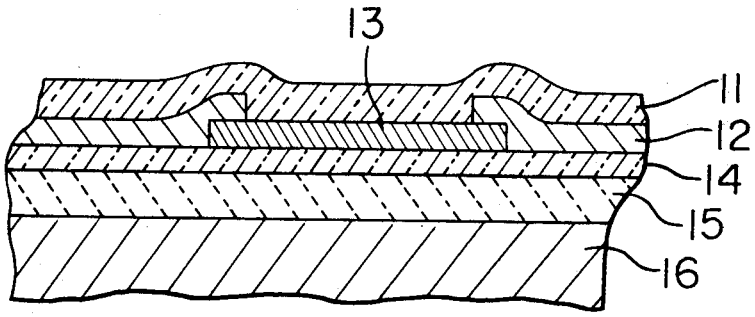
**36 Claims, 48 Drawing Figures**