Fig.1. PRIOR ART

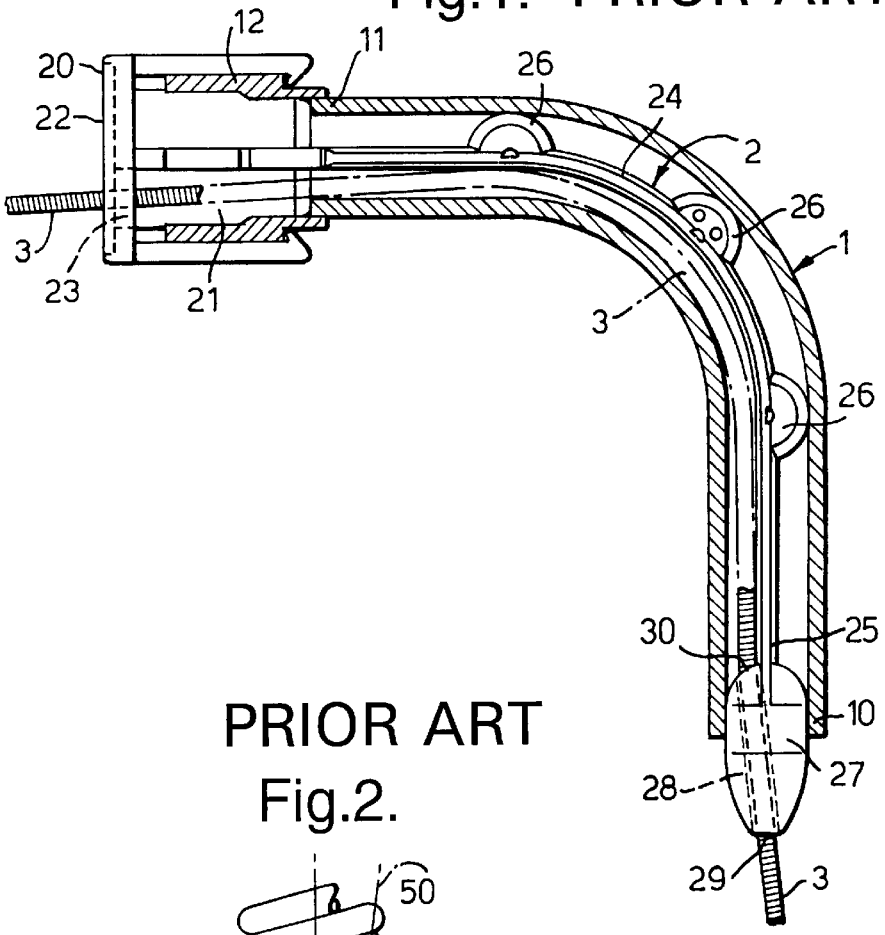

PRIOR ART
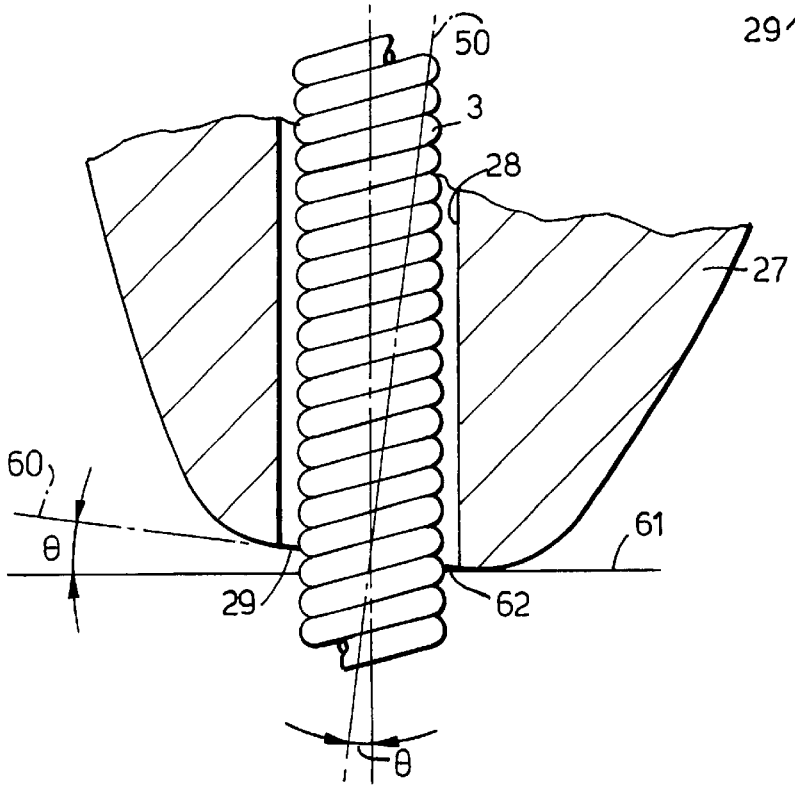
Fig.2.