US006666909B1

(12) **United States Patent**
TeGrotenhuis et al.

(10) **Patent No.: US 6,666,909 B1**
(45) **Date of Patent: Dec. 23, 2003**

(54) **MICROSYSTEM CAPILLARY SEPARATIONS**

(75) Inventors: **Ward E. TeGrotenhuis**, Kennewick, WA (US); **Robert S. Wegeng**, Richland, WA (US); **Greg A. Whyatt**, West Richland, WA (US); **Victoria S. Stenkamp**, Richland, WA (US); **Phillip A. Gauglitz**, Richland, WA (US)

(73) Assignee: **Battelle Memorial Institute**, Richland, WA (US)

(*) Notice: Subject to any disclaimer, the term of this patent is extended or adjusted under 35 U.S.C. 154(b) by 0 days.

(21) Appl. No.: **09/588,871**

(22) Filed: **Jun. 6, 2000**

(51) **Int. Cl.**[7] **F28D 15/02**

(52) **U.S. Cl.** **95/273**; 95/55; 95/56; 55/423; 55/484; 165/60; 165/110; 210/321.75; 210/321.84; 261/104; 261/153; 261/154

(58) **Field of Search** 95/267, 268, 273, 95/288, 286, 52; 96/409, 414, 421, 7, 11, 4, 9; 55/319, 324, 423, 484; 210/321.75, 321.84; 429/26, 37; 165/60, 110; 261/104, 128, 153, 154

(56) **References Cited**

U.S. PATENT DOCUMENTS

3,168,137 A	*	2/1965	Smith	165/110
3,170,512 A	*	2/1965	Smith	165/110
3,289,752 A	*	12/1966	Staub	165/115
3,520,803 A		7/1970	Iaconelli	
3,563,727 A		2/1971	Webb et al.	
3,564,819 A		2/1971	Neulander et al.	
3,587,730 A	*	6/1971	Milton	165/110
3,614,856 A		10/1971	Sanz et al.	
3,619,986 A		11/1971	Mormont et al.	
3,720,044 A		3/1973	Grove et al.	
3,735,562 A		5/1973	Mousseau, Jr. et al.	
3,797,202 A		3/1974	Naulander et al.	
3,925,037 A		12/1975	Ward, III et al.	
3,961,918 A		6/1976	Johnson	
4,187,086 A		2/1980	Walmet et al.	
4,239,728 A		12/1980	Stenberg et al.	
4,715,436 A	*	12/1987	Takahashi et al.	165/110
4,770,238 A		9/1988	Owen	
4,903,761 A		2/1990	Cima	
4,999,107 A		3/1991	Guerif	
5,126,045 A		6/1992	Kohlheb et al.	
5,225,080 A		7/1993	Karbachsch et al.	
5,453,641 A		9/1995	Mundinger et al.	
5,775,410 A	*	7/1998	Ramm-Schmidt et al.	165/110
5,800,595 A	*	9/1998	Wright	95/288
5,919,284 A	*	7/1999	Perry, Jr. et al.	95/286
6,010,554 A	*	1/2000	Birmingham et al.	95/267
6,168,647 B1	*	1/2001	Perry, Jr. et al.	95/268
6,171,374 B1		1/2001	Barton et al.	
6,332,913 B1	*	12/2001	Breitschwerdt et al.	96/7

FOREIGN PATENT DOCUMENTS

BR	PI 9702855-0	4/1999
WO	WO 98/58743	12/1998

OTHER PUBLICATIONS

"Studies on Two–Phase Flows at Normal and Microgravity Conditions," Balaktaiah et al., ISSO–INSTITUTE FOR SPACE SYSTEMS OPERATIONS, 1996–1997, retrieved from internet on Mar. 14,2003.

(List continued on next page.)

Primary Examiner—Duane Smith
Assistant Examiner—Minh-Chan T. Pham
(74) *Attorney, Agent, or Firm*—Frank Rosenberg; Todd J. Harrington

(57) **ABSTRACT**

Laminated, multiphase separators and contactors having wicking structures and gas flow channels are described. Some preferred embodiments are combined with micro-channel heat exchange. Integrated systems containing these components are also part of the present invention.
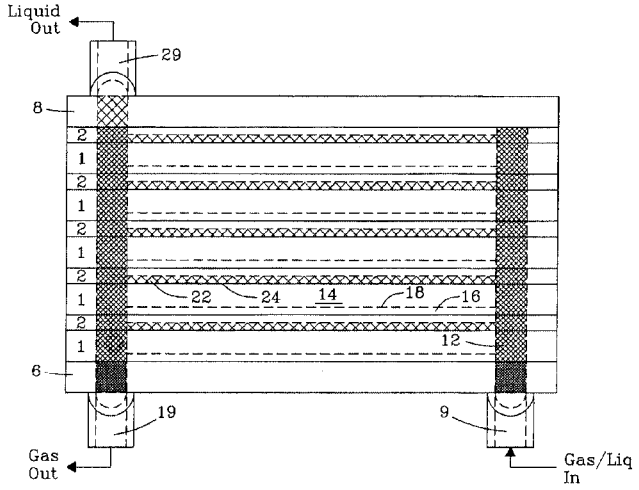
91 Claims, 12 Drawing Sheets