US008456809B2

(12) **United States Patent**
Kim et al.

(10) **Patent No.: US 8,456,809 B2**
(45) **Date of Patent: Jun. 4, 2013**

(54) **MOBILE TERMINAL**

(75) Inventors: **Youngjoong Kim**, Seoul (KR); **Seokhwan Oh**, Incheon (KR); **Janghyun Song**, Seoul (KR); **Wonseok Joo**, Seoul (KR)

(73) Assignee: **LG Electronics Inc.**, Seoul (KR)

(*) Notice: Subject to any disclaimer, the term of this patent is extended or adjusted under 35 U.S.C. 154(b) by 254 days.

(21) Appl. No.: **12/870,677**

(22) Filed: **Aug. 27, 2010**

(65) **Prior Publication Data**

US 2011/0058320 A1 Mar. 10, 2011

(30) **Foreign Application Priority Data**

Sep. 9, 2009 (KR) 10-2009-0085096

(51) **Int. Cl.**
H05K 5/03 (2006.01)

(52) **U.S. Cl.**
USPC **361/679.01**; 361/679.55; 455/575.4

(58) **Field of Classification Search**
USPC 361/679.01, 679.02, 679.55, 679.56, 361/679.58, 679.57; 455/575.1–575.4, 575.8, 455/90.3; 379/433.11–433.13
See application file for complete search history.

(56) **References Cited**

U.S. PATENT DOCUMENTS

5,754,906	A *	5/1998	Yoshida	396/448
7,555,321	B2 *	6/2009	Yamada et al.	455/575.1
7,600,930	B2 *	10/2009	Wang et al.	396/448
7,986,982	B2 *	7/2011	Li et al.	455/575.1
2004/0212555	A1	10/2004	Falco	
2006/0079128	A1	4/2006	Chintala et al.	
2010/0048268	A1 *	2/2010	O'Neill et al.	455/575.8

FOREIGN PATENT DOCUMENTS

EP 1367802 12/2003

OTHER PUBLICATIONS

European Patent Office Application Serial No. 10174961.2, Search Report dated Nov. 30, 2012, 6 pages.

* cited by examiner

Primary Examiner — Jinhee Lee
Assistant Examiner — Ingrid Wright
(74) *Attorney, Agent, or Firm* — Lee, Hong, Degerman, Kang & Waimey

(57) **ABSTRACT**

Disclosed is a mobile terminal in which while a rear case is coupled to or separated from a terminal body, a case is slopingly moved with respect to the terminal body, so a camera hole of the rear case can be freely moved without being restricted by a camera mounting part protruded from the terminal body.
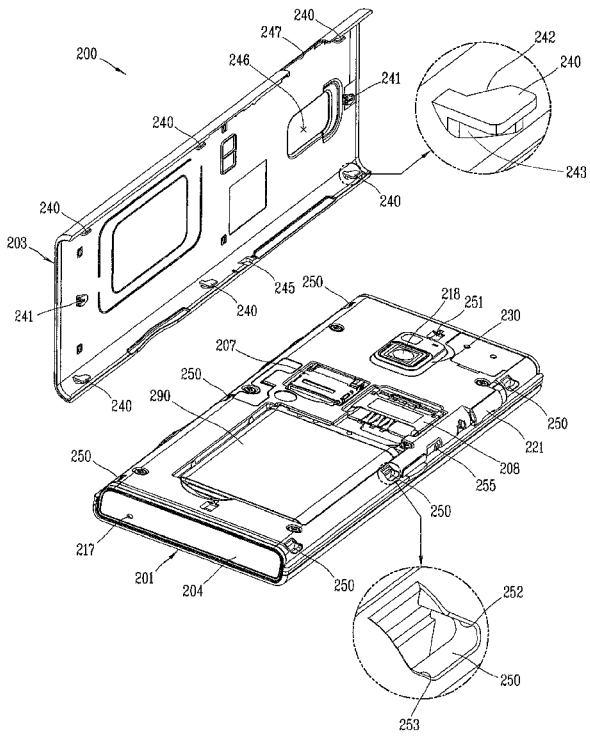
14 Claims, 14 Drawing Sheets