US009638409B2

(12) **United States Patent**
Kuriyama

(10) **Patent No.: US 9,638,409 B2**
(45) **Date of Patent: May 2, 2017**

(54) **LED LAMP**

(71) Applicant: **MITSUBISHI CHEMICAL CORPORATION**, Chiyoda-ku (JP)

(72) Inventor: **Toshihiko Kuriyama**, Yokohama (JP)

(73) Assignee: **MITSUBISHI CHEMICAL CORPORATION**, Chiyoda-ku (JP)

(*) Notice: Subject to any disclaimer, the term of this patent is extended or adjusted under 35 U.S.C. 154(b) by 111 days.

(21) Appl. No.: **14/801,459**

(22) Filed: **Jul. 16, 2015**

(65) **Prior Publication Data**

US 2015/0323169 A1 Nov. 12, 2015

Related U.S. Application Data

(63) Continuation of application No. PCT/JP2013/084076, filed on Dec. 19, 2013.

(30) **Foreign Application Priority Data**

Jan. 29, 2013 (JP) 2013-014414

(51) **Int. Cl.**
F21V 29/77 (2015.01)
F21V 29/85 (2015.01)
(Continued)

(52) **U.S. Cl.**
CPC ***F21V 29/773*** (2015.01); ***F21K 9/233*** (2016.08); ***F21V 19/002*** (2013.01);
(Continued)

(58) **Field of Classification Search**
CPC F21V 29/773; F21V 29/713; F21V 29/85; F21V 19/002; F21V 29/00; F21V 29/10;
(Continued)

(56) **References Cited**

U.S. PATENT DOCUMENTS

7,658,511 B2 2/2010 Sugiyama et al.
7,918,587 B2 * 4/2011 Hsu F21V 29/004 165/104.33
(Continued)

FOREIGN PATENT DOCUMENTS

JP 2004-528698 A 9/2004
JP 2006-502551 A 1/2006
(Continued)

OTHER PUBLICATIONS

International Preliminary Report on Patentability issued Aug. 13, 2015 in PCT/JP2013/084076 filed Dec. 19, 2013 (English translation only).
(Continued)

Primary Examiner — Bao Q Truong
(74) *Attorney, Agent, or Firm* — Oblon, McClelland, Maier & Neustadt, L.L.P.

(57) **ABSTRACT**

An LED lamp comprising: an LED light-emitting module including an LED; an lens module provided in front of the LED light-emitting module; a casing accommodating the LED light-emitting module and having a sectional area decreasing toward a base located on a back portion of the LED lamp; and a heat sink configuring at least part of the casing and dissipating heat emitted by the LED.
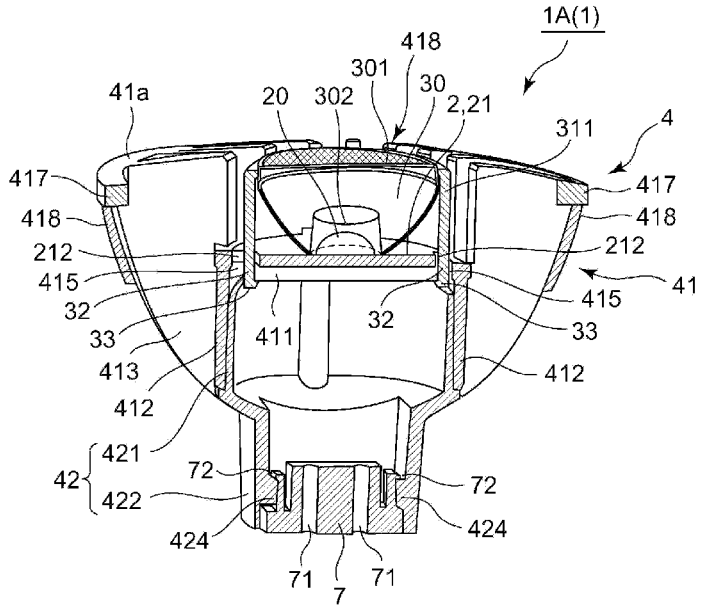
14 Claims, 12 Drawing Sheets