US008137109B2

(12) **United States Patent**
Gatzemeyer et al.

(10) **Patent No.: US 8,137,109 B2**
(45) **Date of Patent: Mar. 20, 2012**

(54) **INTERACTIVE ORAL CARE IMPLEMENT SYSTEM**

(75) Inventors: **John J. Gatzemeyer**, Hillsborough, NJ (US); **Eduardo J. Jimenez**, Manalapan, NJ (US); **Robert Riebe**, Minneapolis, MN (US); **Paul Fair**, Denver, CO (US); **Dong Ho Yun**, Bayside, NY (US)

(73) Assignee: **Colgate-Palmolive Company**, New York, NY (US)

(*) Notice: Subject to any disclaimer, the term of this patent is extended or adjusted under 35 U.S.C. 154(b) by 366 days.

(21) Appl. No.: **11/859,327**

(22) Filed: **Sep. 21, 2007**

(65) **Prior Publication Data**

US 2008/0141478 A1 Jun. 19, 2008

Related U.S. Application Data

(63) Continuation-in-part of application No. 11/610,248, filed on Dec. 13, 2006.

(51) **Int. Cl.**
G09B 19/00 (2006.01)
A63F 13/00 (2006.01)
A46B 15/00 (2006.01)

(52) **U.S. Cl.** **434/238**; 434/118; 434/236; 434/308; 463/1; 15/105

(58) **Field of Classification Search** 434/238; 15/105; 463/1
See application file for complete search history.

(56) **References Cited**

U.S. PATENT DOCUMENTS

4,207,087 A 6/1980 Morrison
5,232,370 A 8/1993 Hoye
5,673,451 A 10/1997 Moore et al.
5,810,601 A 9/1998 Williams
5,864,288 A * 1/1999 Hogan 340/568.1
5,875,796 A 3/1999 Silver-Isenstadt et al.
5,924,159 A 7/1999 Haitin
5,930,858 A 8/1999 Jung
5,943,723 A * 8/1999 Hilfinger et al. 15/22.1
5,944,531 A * 8/1999 Foley et al. 434/263
6,154,912 A 12/2000 Li
6,199,239 B1 3/2001 Dickerson
6,202,242 B1 3/2001 Salmon et al.
6,389,633 B1 5/2002 Rosen

(Continued)

FOREIGN PATENT DOCUMENTS

CA 2 232 528 A1 9/1999

(Continued)

OTHER PUBLICATIONS

International Search Report of PCT/US2007/087134, Mar. 25, 2008.

(Continued)

Primary Examiner — Kang Hu
(74) *Attorney, Agent, or Firm* — Amy M. Fernandez

(57) **ABSTRACT**

An oral care implement has a user-interactive display that displays images representing oral care regions of the mouth. The user can interact with the display by playing a game, which can relate to oral care. An oral care implement has a plurality of lighted segments that can be sequentially illuminated to indicate a recommended brushing sequence. The lighted segments can be shaped and/or labeled to indicate particular oral care regions of the mouth. In accordance with another aspect, an oral care implement can be equipped with features to encourage social interaction between two or more individuals.
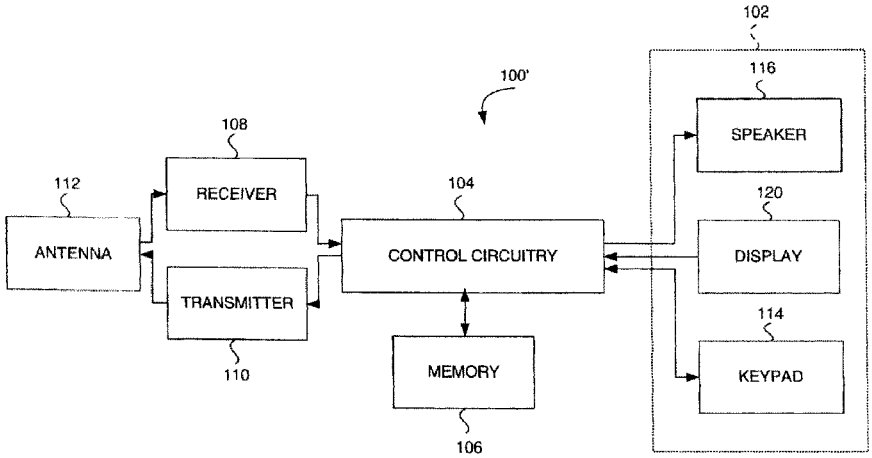
11 Claims, 16 Drawing Sheets