US009636009B2

(12) **United States Patent**
Ogawa

(10) **Patent No.: US 9,636,009 B2**
(45) **Date of Patent: May 2, 2017**

(54) **ENDOSCOPE**

(71) Applicant: **OLYMPUS CORPORATION**, Tokyo (JP)

(72) Inventor: **Tomoaki Ogawa**, Machida (JP)

(73) Assignee: **OLYMPUS CORPORATION**, Tokyo (JP)

(*) Notice: Subject to any disclaimer, the term of this patent is extended or adjusted under 35 U.S.C. 154(b) by 134 days.

(21) Appl. No.: **14/673,964**

(22) Filed: **Mar. 31, 2015**

(65) **Prior Publication Data**

US 2015/0265142 A1 Sep. 24, 2015

Related U.S. Application Data

(63) Continuation of application No. PCT/JP2014/063223, filed on May 19, 2014.

(30) **Foreign Application Priority Data**

Jun. 25, 2013 (JP) 2013-132944

(51) **Int. Cl.**

A61B 1/04	(2006.01)
A61B 1/00	(2006.01)
A61B 1/267	(2006.01)
G02B 23/24	(2006.01)
A61B 1/06	(2006.01)

(52) **U.S. Cl.**

CPC ***A61B 1/2676*** (2013.01); ***A61B 1/0008*** (2013.01); ***A61B 1/00071*** (2013.01); ***A61B 1/00165*** (2013.01); ***A61B 1/04*** (2013.01); ***A61B 1/06*** (2013.01); ***G02B 23/24*** (2013.01); *A61B 1/0011* (2013.01)

(58) **Field of Classification Search**

CPC A61B 1/2676; A61B 1/04; A61B 1/06; A61B 1/00071; A61B 1/00089; A61B 1/00101

USPC 600/127, 129

See application file for complete search history.

(56) **References Cited**

U.S. PATENT DOCUMENTS

4,788,967	A *	12/1988	Ueda	A61B 1/0008 385/119
2004/0082883	A1	4/2004	Kohno	
2006/0030753	A1 *	2/2006	Boutillette	A61B 1/00071 600/146

FOREIGN PATENT DOCUMENTS

CN	1988842	A	6/2007
JP	10-028669	A	2/1998
JP	2000-300567	A	10/2000

(Continued)

OTHER PUBLICATIONS

International Search Report dated Aug. 12, 2014 issued in PCT/JP2014/063223.

Primary Examiner — Timothy J Neal

(74) *Attorney, Agent, or Firm* — Scully, Scott, Murphy & Presser, P.C.

(57) **ABSTRACT**

A holding frame made of a material to bear a greater shear stress than a distal end portion rigid portion (a distal end portion) is adhered and fixed to the distal end rigid portion in a state where one end face is exposed from an inclined surface, and an image guide and a light guide are held through the holding frame. In addition, a groove is provided on a side surface of the holding frame and one end of the groove is exposed on a distal end face (the inclined surface) of the distal end rigid portion, to thereby realize downsizing of the distal end portion without lowering durability and improve repairability.
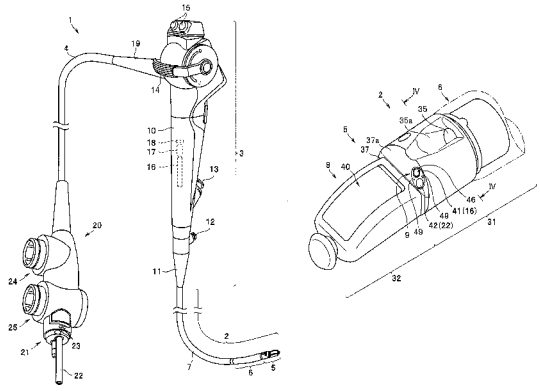
12 Claims, 8 Drawing Sheets