Dec. 17, 1968 W. M. WALTON Re. 26,509

PULSATION TYPE PUMPS

Original Filed March 9, 1962 3 Sheets-Sheet 1

Fig. 1

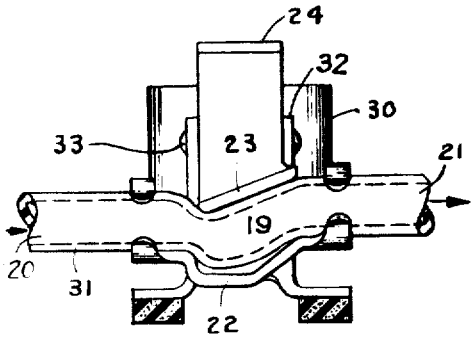

Fig. 2

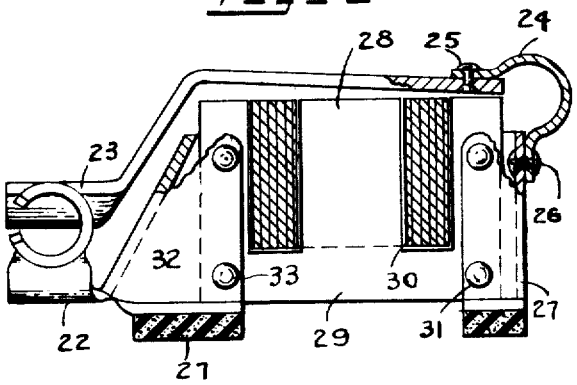

Fig. 3

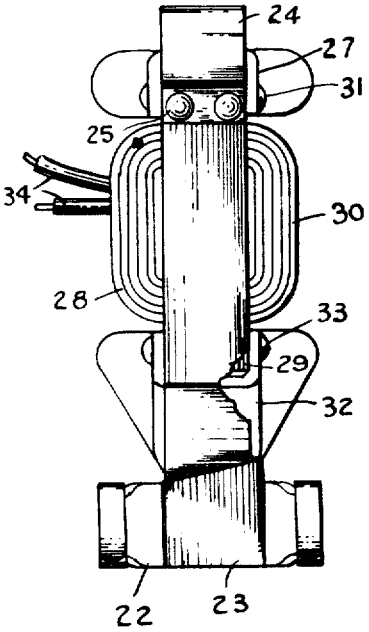

Fig. 4

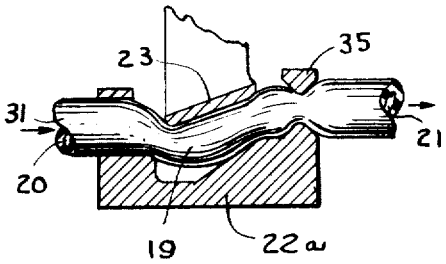

INVENTOR

William Melin Walton

BY

Andrew F. Winterscheidt

ATTORNEY