Sept. 5, 1933. F. H. SCHWARTZ 1,925,209

CONCEALED HINGE

Filed June 18, 1932

Fig. 1

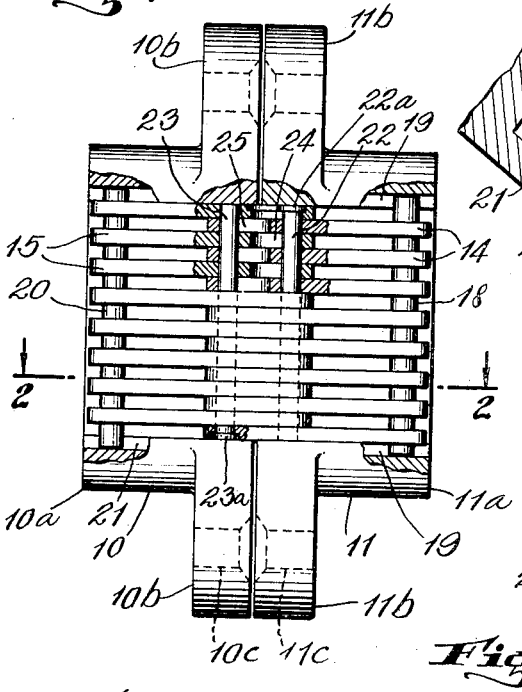


Fig. 3

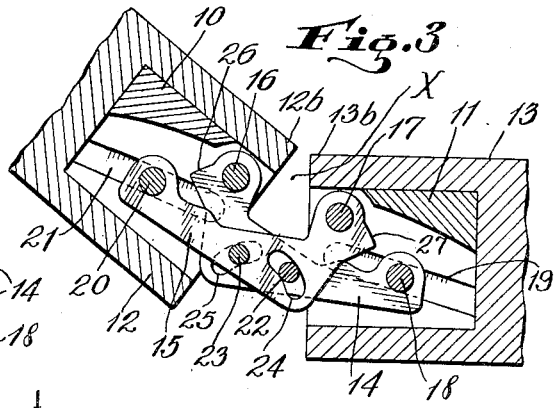


Fig. 4

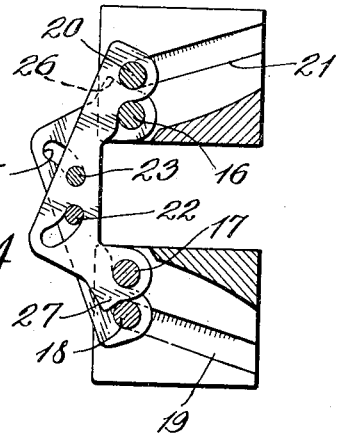


Fig. 2

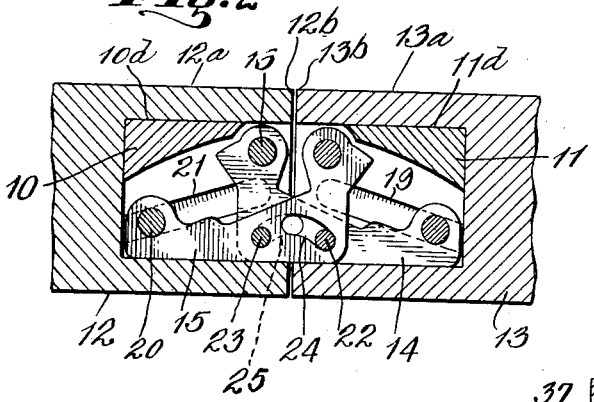


Fig. 5

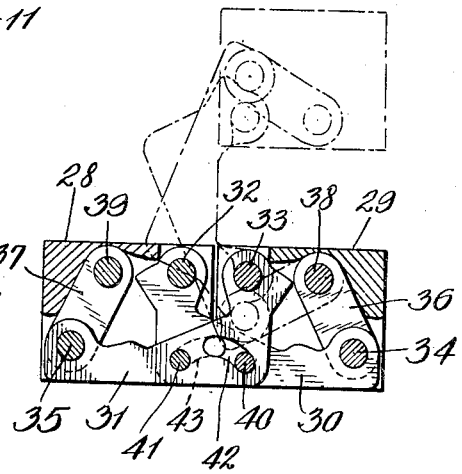


INVENTOR.
FRANCIS H. SCHWARTZ
BY
Thomas E. Thompson
ATTORNEY.