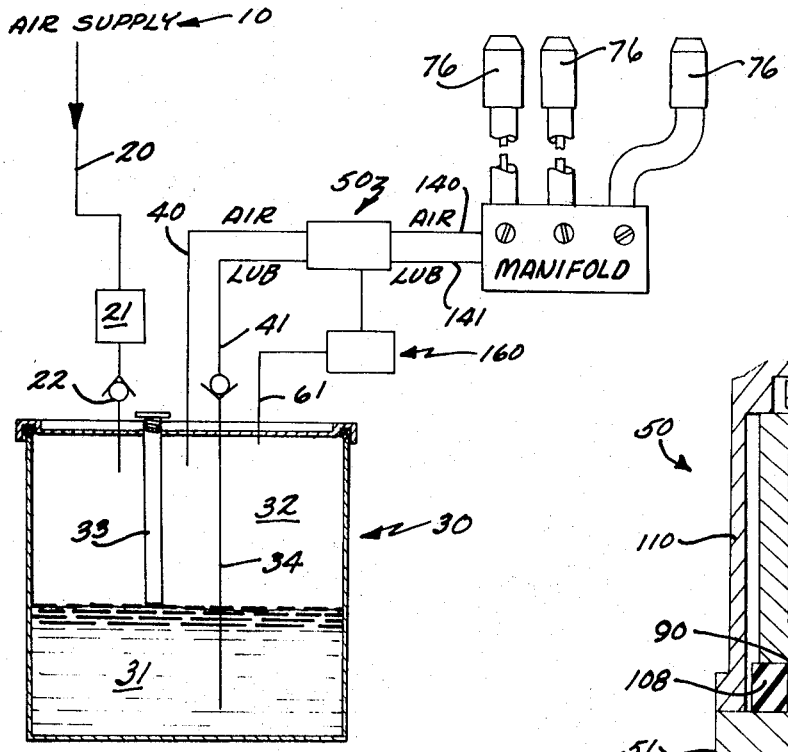

FIG. 1.

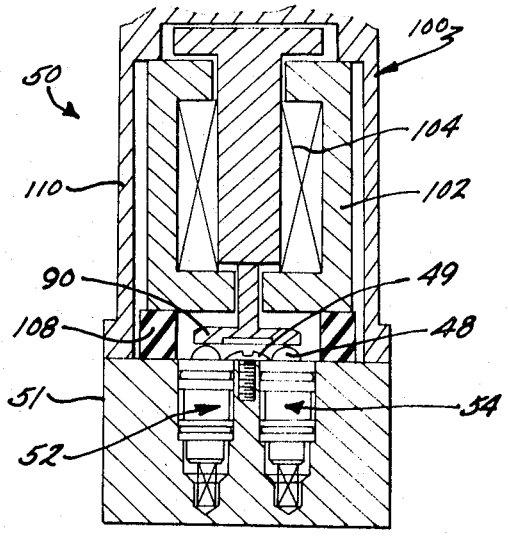

FIG. 2.

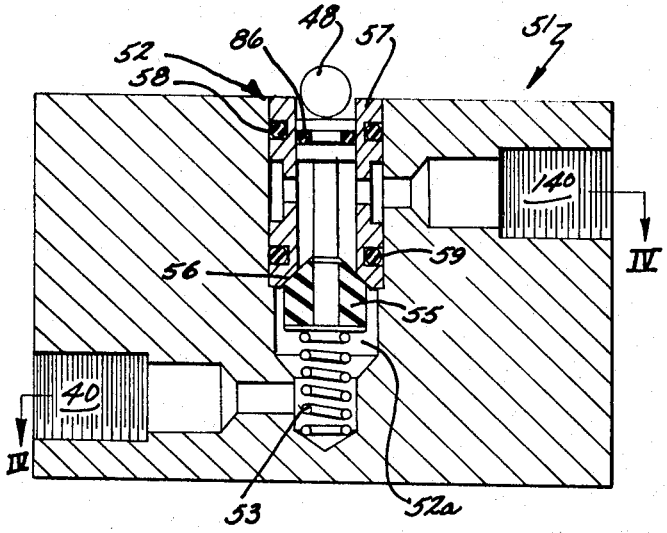

FIG. 3

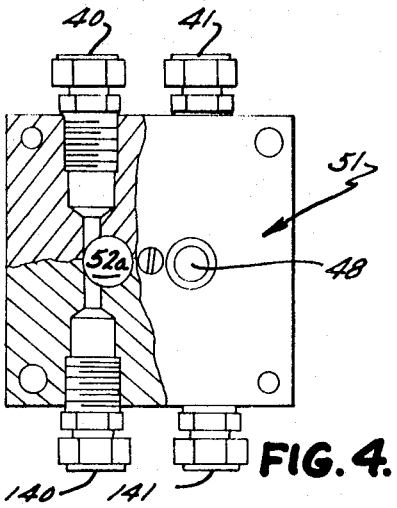

FIG. 4.

INVENTOR.
WALLACE G. BOELKINS
BY Price, Heneveld, Huizenga & Cooper
ATTORNEYS