US009410709B2

(12) **United States Patent**
Kopko et al.

(10) **Patent No.: US 9,410,709 B2**
(45) **Date of Patent: Aug. 9, 2016**

(54) **MULTICHANNEL CONDENSER COIL WITH REFRIGERANT STORAGE RECEIVER**

(75) Inventors: **William L. Kopko**, Jacobus, PA (US); **Jose Ruel Yalung De La Cruz**, Dover, PA (US)

(73) Assignee: **Johnson Controls Technology Company**, Holland, MI (US)

(*) Notice: Subject to any disclaimer, the term of this patent is extended or adjusted under 35 U.S.C. 154(b) by 1436 days.

(21) Appl. No.: **12/594,730**

(22) PCT Filed: **Apr. 4, 2008**

(86) PCT No.: **PCT/US2008/059488**

§ 371 (c)(1),
(2), (4) Date: **Feb. 23, 2010**

(87) PCT Pub. No.: **WO2008/124637**

PCT Pub. Date: **Oct. 16, 2008**

(65) **Prior Publication Data**

US 2010/0162739 A1 Jul. 1, 2010

Related U.S. Application Data

(60) Provisional application No. 60/910,334, filed on Apr. 5, 2007.

(51) **Int. Cl.**

F25B 1/00	(2006.01)
F24F 1/16	(2011.01)
F24F 1/50	(2011.01)
F24F 1/68	(2011.01)
F25B 39/04	(2006.01)
F25D 23/00	(2006.01)

(52) **U.S. Cl.**

CPC ... ***F24F 1/16*** (2013.01); ***F24F 1/50*** (2013.01); ***F24F 1/68*** (2013.01); ***F25B 39/04*** (2013.01); ***F25D 23/00*** (2013.01); *F25B 2400/16* (2013.01)

(58) **Field of Classification Search**

CPC F25B 2339/044; F25B 2345/003; F25B 2345/002; F25B 2400/19; F25B 2600/2523

USPC 62/174, 149, 292, 529, 115, 498, 77, 62/503, 175; 165/70, 71, 302

See application file for complete search history.

(56) **References Cited**

U.S. PATENT DOCUMENTS

3,010,289	A *	11/1961	Kuklinski	F25B 27/00	62/196.1
3,392,542	A *	7/1968	Nussbaum	F25B 47/022	62/196.4
3,939,668	A *	2/1976	Morris	F25B 41/00	62/117
4,757,696	A	7/1988	Gannaway		
4,841,739	A *	6/1989	Wallner		62/174

(Continued)

FOREIGN PATENT DOCUMENTS

EP	1150076 A2	10/2001		
EP	2078906 A2 *	7/2009		F25B 39/04
JP	01-124588 A1	5/1989		

(Continued)

Primary Examiner — Jonathan Bradford

(74) *Attorney, Agent, or Firm* — McNees Wallace & Nurick LLC

(57) **ABSTRACT**

A chiller including a condenser having a refrigerant-storage vessel in fluid communication with a multichannel heat exchanger is disclosed. The chiller further includes a compressor, an evaporator and an expansion device connected in a refrigerant circuit. The refrigerant-storage vessel provides system volume for pump down operations.
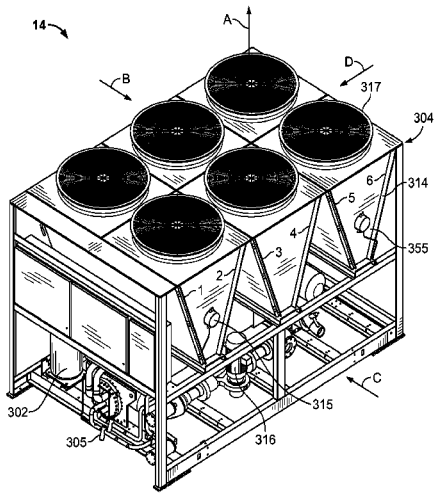
20 Claims, 7 Drawing Sheets