US009510609B2

(12) **United States Patent**
Kamaguchi et al.

(10) **Patent No.: US 9,510,609 B2**
(45) **Date of Patent: Dec. 6, 2016**

(54) **SEAMLESS CAPSULE AND MANUFACTURING METHOD THEREFOR**

(71) Applicant: **MORISHITA JINTAN CO., LTD.**, Osaka-shi, Osaka (JP)

(72) Inventors: **Ryosei Kamaguchi**, Hirakata (JP); **Osami Nakano**, Hirakata (JP); **Hisaaki Hatanaka**, Hirakata (JP)

(73) Assignee: **MORISHITA JINTAN CO., LTD.**, Osaka (JP)

(*) Notice: Subject to any disclaimer, the term of this patent is extended or adjusted under 35 U.S.C. 154(b) by 0 days.

(21) Appl. No.: **14/347,869**

(22) PCT Filed: **Sep. 21, 2012**

(86) PCT No.: **PCT/JP2012/074246**
§ 371 (c)(1),
(2) Date: **Mar. 27, 2014**

(87) PCT Pub. No.: **WO2013/047376**
PCT Pub. Date: **Apr. 4, 2013**

(65) **Prior Publication Data**

US 2014/0234411 A1 Aug. 21, 2014

(30) **Foreign Application Priority Data**

Sep. 29, 2011 (JP) 2011-214543

(51) **Int. Cl.**

A23L 1/00	(2006.01)
A61J 1/00	(2006.01)
A61K 9/48	(2006.01)
A61K 9/50	(2006.01)
B01J 13/04	(2006.01)
A61K 9/00	(2006.01)

(52) **U.S. Cl.**
CPC ***A23L 1/0029*** (2013.01); ***A23L 27/72*** (2016.08); ***A23P 10/30*** (2016.08); ***A61J 1/00*** (2013.01); ***A61K 9/0056*** (2013.01); ***A61K 9/4825*** (2013.01); ***A61K 9/4833*** (2013.01); ***A61K 9/5015*** (2013.01); ***A61K 9/5057*** (2013.01); ***A61K 9/5089*** (2013.01); ***B01J 13/04*** (2013.01)

(58) **Field of Classification Search**
CPC A23P 10/30
See application file for complete search history.

(56) **References Cited**

U.S. PATENT DOCUMENTS

5,254,294 A * 10/1993 Wunderlich et al. 264/4
5,330,835 A * 7/1994 Kikuchi et al. 428/402.22
5,603,952 A 2/1997 Soper

(Continued)

FOREIGN PATENT DOCUMENTS

CN 101969932 A 2/2011
EP 0 116 311 8/1984

(Continued)

Primary Examiner — Ileana Popa
Assistant Examiner — Nicole Babson
(74) *Attorney, Agent, or Firm* — Hamre, Schumann, Mueller & Larson, P.C.

(57) **ABSTRACT**

The present invention is related to a seamless capsule which easily dissolves in the oral cavity etc. The present invention provides a seamless capsule comprising a capsule content solution, and a capsule shell enclosing the capsule content solution, wherein the capsule shell comprises a gelatin having a bloom value of 50 to 190 and wherein the seamless capsule has a capsule shell-dissolution time of 60 seconds or less when the dissolution time is determined by a disintegration test using water as a test solution.
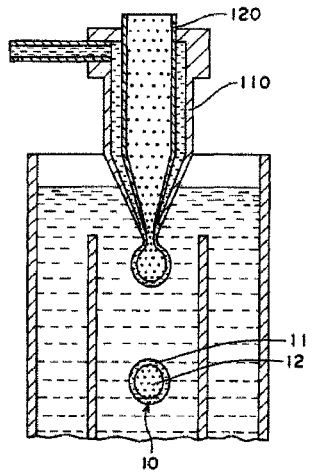
3 Claims, 1 Drawing Sheet