US009510509B2

(12) **United States Patent**
Kraus et al.

(10) **Patent No.: US 9,510,509 B2**
(45) **Date of Patent: Dec. 6, 2016**

(54) **TWO-STAGE HARVESTING SYSTEM**

(75) Inventors: **Timothy J Kraus**, Blakesburg, IA (US); **Jeremy M Erdmann**, Floris, IA (US)

(73) Assignee: **DEERE & COMPANY**, Moline, IL (US)

(*) Notice: Subject to any disclaimer, the term of this patent is extended or adjusted under 35 U.S.C. 154(b) by 355 days.

(21) Appl. No.: **13/601,415**

(22) Filed: **Aug. 31, 2012**

(65) **Prior Publication Data**

US 2014/0059992 A1 Mar. 6, 2014

(51) **Int. Cl.**

A01D 34/00	(2006.01)
A01D 43/00	(2006.01)
A01D 45/00	(2006.01)
A01D 91/04	(2006.01)

(52) **U.S. Cl.**

CPC ***A01D 43/00*** (2013.01); ***A01D 45/00*** (2013.01); ***A01D 91/04*** (2013.01)

(58) **Field of Classification Search**

CPC A01D 45/00; A01D 45/16; A01D 43/00; A01D 91/04

USPC 56/13.5, 53, 56, 14.5, 192, 126

See application file for complete search history.

(56) **References Cited**

U.S. PATENT DOCUMENTS

3,178,871	A	4/1965	Nothnagel	
3,298,162	A *	1/1967	Medd	56/13.9
3,492,796	A *	2/1970	Lundell	56/1
3,638,406	A *	2/1972	Scherer et al.	56/14.9
4,042,132	A *	8/1977	Bohman et al.	414/335
4,115,984	A *	9/1978	Simpson	56/13.5
4,183,471	A	1/1980	Pfister	
4,376,609	A *	3/1983	Bohman et al.	414/335
5,557,859	A *	9/1996	Baron	34/378
5,941,768	A *	8/1999	Flamme	460/114
6,682,416	B2 *	1/2004	Behnke et al.	460/114
7,337,023	B2 *	2/2008	Diekhans	700/52
7,509,785	B2 *	3/2009	Fukumori et al.	53/211
7,721,516	B2 *	5/2010	Wendling	56/10.2 A
7,818,954	B2 *	10/2010	Rempe et al.	56/341
8,132,397	B2 *	3/2012	Shields	56/341
8,180,534	B2 *	5/2012	Burke et al.	701/50
8,443,580	B2 *	5/2013	Matousek et al.	56/341
8,464,508	B2 *	6/2013	Matousek et al.	56/341
2003/0093979	A1 *	5/2003	Fukumori et al.	53/587
2005/0126150	A1	6/2005	Talbott et al.	
2009/0019826	A1	1/2009	Rigney	

(Continued)

FOREIGN PATENT DOCUMENTS

DE	2819101 A1	11/1979
DE	3317568 A1	12/1983
FR	1270071 A1	8/1961

(Continued)

OTHER PUBLICATIONS

European Search Report, dated Oct. 30, 2013 (5 pages).

Primary Examiner — Robert Pezzuto
Assistant Examiner — Joan D Misa

(57) **ABSTRACT**

A two-stage harvesting system including a first stage harvesting apparatus and a second stage harvesting apparatus. The first stage harvesting apparatus takes a first crop portion from an agricultural crop leaving a second crop portion in a field. The second stage harvesting apparatus takes the second crop portion. The first stage harvesting apparatus and the second stage harvesting apparatus are connected together.
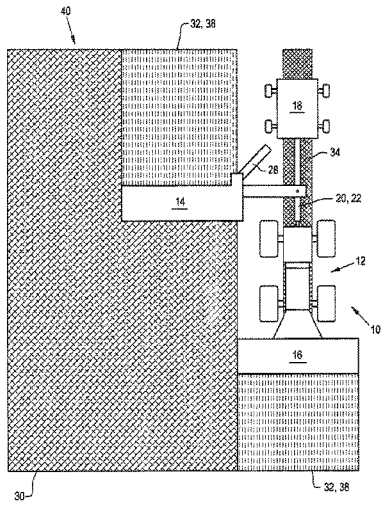
12 Claims, 2 Drawing Sheets