US009409709B2

(12) **United States Patent**
Keating et al.

(10) **Patent No.: US 9,409,709 B2**
(45) **Date of Patent: Aug. 9, 2016**

(54) **AUTOMATED STORAGE AND RETRIEVAL SYSTEM STRUCTURE**

(71) Applicant: **Symbotic, LLC**, Wilmington, MA (US)

(72) Inventors: **John F. Keating**, Billerica, MA (US); **Lawrence A. Margagliano**, Boylston, MA (US); **Thomas G. Perry**, Pepperell, MA (US); **William Johnson, Jr.**, Andover, MA (US); **Todd E. Kepple**, Litchfield, NH (US)

(73) Assignee: **Symbotic, LLC**, Wilmington, MA (US)

(*) Notice: Subject to any disclaimer, the term of this patent is extended or adjusted under 35 U.S.C. 154(b) by 0 days.

(21) Appl. No.: **14/209,209**

(22) Filed: **Mar. 13, 2014**

(65) **Prior Publication Data**

US 2014/0311858 A1 Oct. 23, 2014

Related U.S. Application Data

(60) Provisional application No. 61/780,363, filed on Mar. 13, 2013.

(51) **Int. Cl.**
B65G 1/04 (2006.01)
B65G 1/02 (2006.01)

(52) **U.S. Cl.**
CPC ***B65G 1/0492*** (2013.01); *B65G 1/02* (2013.01); *B65G 2207/20* (2013.01)

(58) **Field of Classification Search**
None
See application file for complete search history.

(56) **References Cited**

U.S. PATENT DOCUMENTS

3,745,726	A	7/1973	Thom	
4,168,780	A	9/1979	Parrott	
4,285,436	A	8/1981	Konstant et al.	
5,002,449	A *	3/1991	Kita	B65G 1/0492 414/273
5,370,492	A	12/1994	Gleyze et al.	
5,397,005	A	3/1995	Taccolini	
5,445,080	A	8/1995	Austin	
5,611,181	A	3/1997	Shreiner et al.	
5,644,879	A	7/1997	Shreiner et al.	
5,967,728	A	10/1999	Gales et al.	
6,149,366	A	11/2000	Deandrea	
6,158,566	A *	12/2000	Pollock	B65G 47/5181 198/347.3
6,290,074	B1	9/2001	Syvuk et al.	
6,360,673	B1	3/2002	Herrin et al.	
6,390,756	B1 *	5/2002	Isaacs	B07C 3/008 209/200
6,672,573	B2	1/2004	Berton	
7,025,191	B2 *	4/2006	Lichti	B65G 1/127 198/347.1
7,080,725	B2	7/2006	Hishinuma	

(Continued)

FOREIGN PATENT DOCUMENTS

EP	1086910	3/2001
JP	56012204	2/1981

(Continued)

Primary Examiner — Kavel Singh
(74) *Attorney, Agent, or Firm* — Perman & Green, LLP

(57) **ABSTRACT**

An automated storage and retrieval system includes an autonomous rover and a multilevel rack structure. The multilevel rack structure includes columns connected by rail beams transversely spanning between the columns. The rail beams define storage and transport levels and provide riding surfaces for the autonomous rover. The rail beams include integral fatigue resistant rover location apertures.
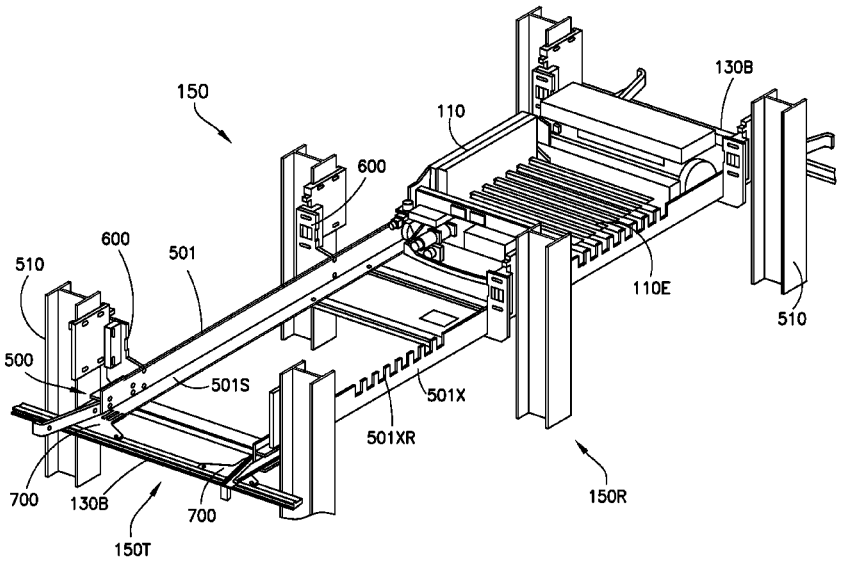
19 Claims, 15 Drawing Sheets