US009408709B2

(12) **United States Patent**
Wirtel, III et al.

(10) **Patent No.: US 9,408,709 B2**
(45) **Date of Patent: *Aug. 9, 2016**

(54) **INFLATABLE MULTI-CHAMBERED DEVICES AND METHODS OF TREATMENT USING THE SAME**

(71) Applicant: **GLOBUS MEDICAL, INC.**, Audubon, PA (US)

(72) Inventors: **Anthony Wirtel, III**, Malvern, PA (US); **Mark Borden**, Collegeville, PA (US)

(73) Assignee: **Globus Medical, Inc.**, Audubon, PA (US)

(*) Notice: Subject to any disclaimer, the term of this patent is extended or adjusted under 35 U.S.C. 154(b) by 558 days.

This patent is subject to a terminal disclaimer.

(21) Appl. No.: **13/891,677**

(22) Filed: **May 10, 2013**

(65) **Prior Publication Data**

US 2014/0052250 A1 Feb. 20, 2014

Related U.S. Application Data

(63) Continuation of application No. 13/473,545, filed on May 16, 2012, now Pat. No. 8,460,383, which is a continuation of application No. 11/761,069, filed on Jun. 11, 2007, now Pat. No. 8,236,057.

(60) Provisional application No. 60/804,505, filed on Jun. 12, 2006.

(51) **Int. Cl.**

A61F 2/44	(2006.01)
A61M 29/00	(2006.01)
A61F 2/42	(2006.01)
A61F 2/30	(2006.01)

(52) **U.S. Cl.**

CPC ***A61F 2/441*** (2013.01); *A61F 2/4202* (2013.01); *A61F 2/4225* (2013.01); *A61F 2/4241* (2013.01); *A61F 2/442* (2013.01); *A61F 2002/302* (2013.01); *A61F 2002/3008* (2013.01); *A61F 2002/30062* (2013.01); *A61F 2002/30133* (2013.01); *A61F 2002/30563* (2013.01); *A61F 2002/30583* (2013.01); *A61F 2002/30584* (2013.01); *A61F 2002/30586* (2013.01); *A61F 2002/30599* (2013.01); *A61F 2002/30917* (2013.01); *A61F 2002/444* (2013.01); *A61F 2210/0004* (2013.01); *A61F 2210/0085* (2013.01); *A61F 2230/0015* (2013.01); *A61F 2230/0065* (2013.01); *A61F 2250/0063* (2013.01); *A61F 2250/0098* (2013.01)

(58) **Field of Classification Search**

CPC A61F 2/44; A61F 2/441; A61F 2/442; A61F 2002/444; A61F 2002/30062; A61F 2002/3008; A61F 2002/302; A61F 2230/0065; A61F 2002/30583; A61F 2002/30584; A61F 2002/30586

See application file for complete search history.

(56) **References Cited**

U.S. PATENT DOCUMENTS

8,236,057	B2 *	8/2012	Wirtel, III	A61F 2/441 623/17.12
8,460,383	B2 *	6/2013	Wirtel, III	A61F 2/441 606/192

(Continued)

Primary Examiner — Katherine Rodjom

(57) **ABSTRACT**

Inflatable multi-chambered devices are provided for repairing or replacing spinal discs and distracting neighboring vertebral elements. Also included are cushioning devices that may be used in a joint replacement device cushioning system. Further included are kits and systems that include such devices, methods for making such devices, and methods of treating patients in need of such devices. Examples further include cosmetic augmentation and restoration devices.
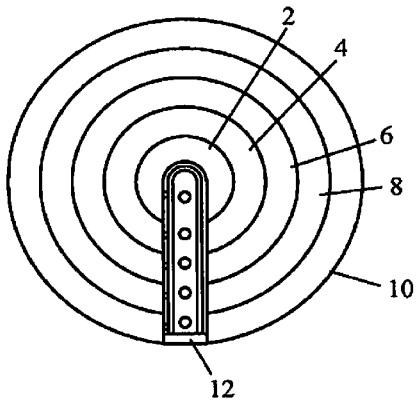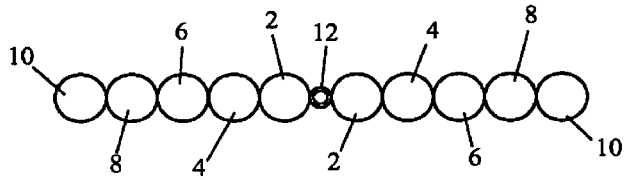
18 Claims, 11 Drawing Sheets