US010004609B2

(12) **United States Patent**
Palmatier et al.

(10) **Patent No.: US 10,004,609 B2**
(45) **Date of Patent: Jun. 26, 2018**

(54) **SURGICAL INSTRUMENT AND METHOD**

(71) Applicant: **Warsaw Orthopedic, Inc**, Warsaw, IN (US)

(72) Inventors: **Stanley T. Palmatier**, Olive Branch, MS (US); **William D. Armstrong**, Memphis, TN (US); **Anthony J. Melkent**, Germantown, TN (US)

(73) Assignee: **Warsaw Orthopedic, Inc.**, Warsaw, IN (US)

(*) Notice: Subject to any disclaimer, the term of this patent is extended or adjusted under 35 U.S.C. 154(b) by 0 days. days.

(21) Appl. No.: **15/274,672**

(22) Filed: **Sep. 23, 2016**

(65) **Prior Publication Data**

US 2018/0085232 A1 Mar. 29, 2018

(51) **Int. Cl.**

A61B 17/88	(2006.01)
A61B 17/17	(2006.01)
A61B 17/00	(2006.01)
A61F 2/44	(2006.01)
A61F 2/46	(2006.01)

(52) **U.S. Cl.**

CPC ***A61F 2/4611*** (2013.01); *A61F 2002/4615* (2013.01); *A61F 2002/4623* (2013.01); *A61F 2002/4632* (2013.01); *A61F 2002/4635* (2013.01); *A61F 2002/4687* (2013.01); *A61F 2250/0006* (2013.01)

(58) **Field of Classification Search**

CPC A61F 2/4611; A61F 2/442; A61F 2/446; A61F 2/447; A61F 2002/4615; A61F 2002/4623; A61F 2002/4635; A61F 2002/4687; A61F 2002/4475; A61F 2002/4622; A61F 2002/4629; A61F 2002/30092; A61F 2250/0006

USPC ..... 606/180, 249, 247, 279, 86 A, 907, 909, 606/912, 914, 96, 99, 100, 102, 104, 105; 600/429, 427, 426, 423, 424, 414, 421; 408/147, 158

See application file for complete search history.

(56) **References Cited**

U.S. PATENT DOCUMENTS

6,042,582	A	3/2000	Ray
6,428,544	B1	8/2002	Ralph et al.
7,235,082	B2	6/2007	Bartish et al.
7,481,824	B2	1/2009	Gillum et al.
7,549,998	B2	6/2009	Braun
7,695,478	B2	4/2010	Ralph et al.
7,803,162	B2	9/2010	Marnay et al.
7,806,932	B2	10/2010	Webb et al.
7,892,239	B2	2/2011	Warnick et al.

(Continued)

OTHER PUBLICATIONS

International Search Report for International Application No. PCT/US2017/013849 prepared Jun. 22, 2017 by ISA Korean Intellectual Property Office, 189 Cheongsa-ro, Seo-gu, Daejeon, 35208, Republic of Korea.

(Continued)

Primary Examiner — Pedro Philogene

(57) **ABSTRACT**

A surgical instrument comprises a member connected with a spinal implant defining an axis. A first image guide is connected with the member and oriented relative to a sensor to communicate a signal representative of a position of the member. A second image guide is connected with the member and oriented to represent an angle measuring a second orientation of the axis relative to a first orientation. Systems, implants and methods are disclosed.
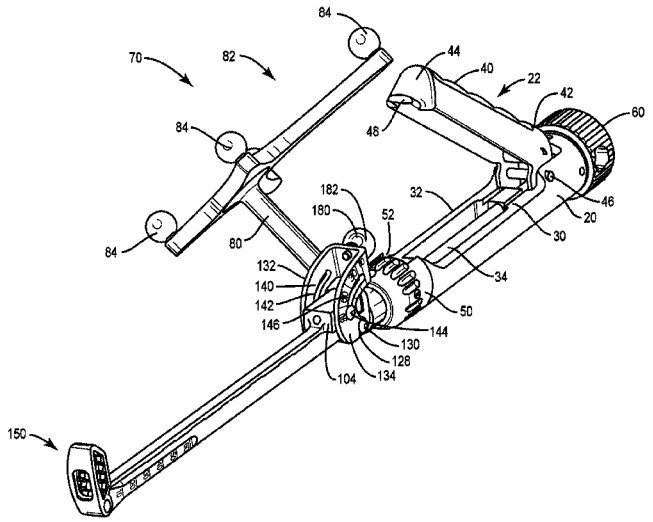
20 Claims, 12 Drawing Sheets