US006401209B1

(12) **United States Patent**
Klein

(10) **Patent No.: US 6,401,209 B1**
(45) **Date of Patent: Jun. 4, 2002**

(54) **METHOD FOR AUTOMATICALLY INITIATING A COMPUTER SECURITY AND/OR SCREEN SAVER MODE**

(75) Inventor: **Dean Klein**, Eagle, ID (US)

(73) Assignee: **Micron Technology, Inc.**, Boise, ID (US)

(*) Notice: Subject to any disclaimer, the term of this patent is extended or adjusted under 35 U.S.C. 154(b) by 0 days.

(21) Appl. No.: **09/037,360**

(22) Filed: **Mar. 9, 1998**

(51) **Int. Cl.**[7] **G06F 11/00**
(52) **U.S. Cl.** **713/200**; 380/25
(58) **Field of Search** 713/200, 201, 713/202; 380/4, 23, 25; 382/118, 119; 340/825.34; 235/382.5, 382, 380

(56) **References Cited**

U.S. PATENT DOCUMENTS

4,947,765 A * 8/1990 Biedess 109/6
5,007,085 A * 4/1991 Greanias et al. 380/25
5,377,269 A * 12/1994 Heptig et al. 380/25
5,408,536 A * 4/1995 Lemelson 382/2
5,548,764 A * 8/1996 Duley et al. 395/750
5,574,424 A * 11/1996 Nguyen 340/426
5,629,981 A * 5/1997 Nerlikar 380/25
5,752,044 A * 5/1998 Crump et al. 395/750
5,835,083 A * 11/1998 Nielsen et al. 345/211
5,848,231 A * 12/1998 Teitelbaum et al. 395/186
5,887,131 A * 3/1999 Angelo 395/188.01
5,949,882 A * 9/1999 Angelo 380/25
5,959,530 A * 9/1999 Lupien, Jr. et al. 340/568.1
5,983,273 A * 11/1999 White et al. 709/229
6,070,240 A * 5/2000 Xydis 395/186
6,088,450 A * 7/2000 Davis et al. 380/25
6,189,105 B1 * 2/2001 Lopes 713/202
6,282,655 B1 * 8/2001 Given 713/200
6,308,272 B1 * 10/2001 Pearce 713/200

* cited by examiner

Primary Examiner—Nadeem Iqbal
(74) *Attorney, Agent, or Firm*—Dorsey & Whitney LLP

(57) **ABSTRACT**

A method for automatically switching a computer to a password protected screen saver mode when a computer user leaves the proximity of the computer. A proximity sensor determines whether or not an individual is located proximate the computer. The proximity sensor interfaces with either the computer a bus bridge, a keyboard controller, a keyboard, or some another component of the computer to cause the computer to start executing a screen saver program responsive to an output signal from the proximity sensor. A variety of proximity sensors may be used, including ultrasound, infrared, or electromagnetic proximity sensors. A proximity sensor may also detect the presence of a computer user by detecting the weight of the user at a location proximate the computer.
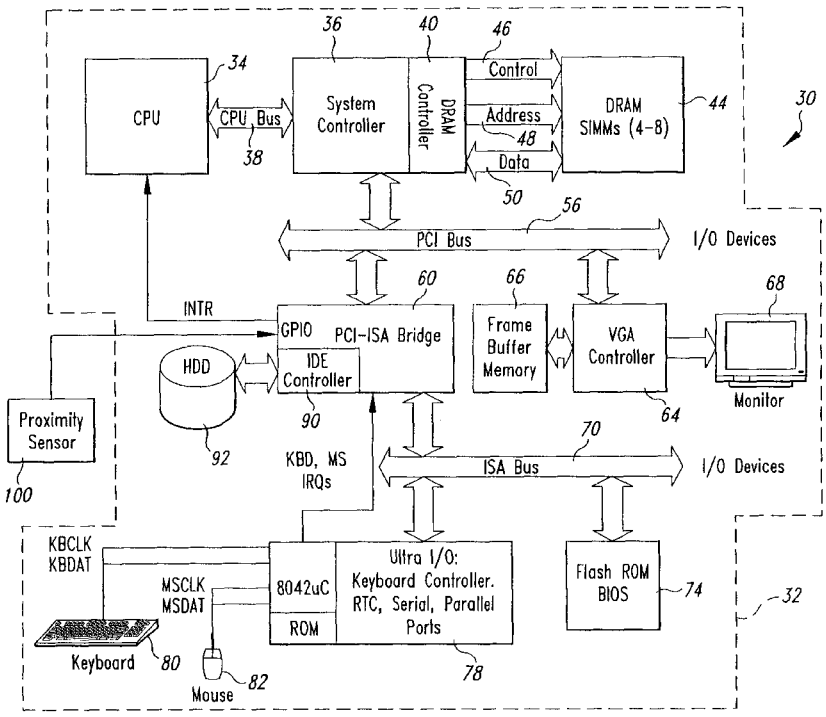
27 Claims, 5 Drawing Sheets