US005497008C1

(12) EX PARTE REEXAMINATION CERTIFICATE (5317th)

United States Patent

Kumakhov

(10) Number: US 5,497,008 C1

(45) Certificate Issued: Apr. 4, 2006

(54) **USE OF A KUMAKHOV LENS IN ANALYTIC INSTRUMENTS**

(75) Inventor: **Muradin A. Kumakhov**, Moscow (SU)

(73) Assignee: **X-Ray Optical Systems, Inc.**, Voorheesville, NY (US)

Reexamination Request:
No. 90/005,778, Jul. 31, 2000

Reexamination Certificate for:

Patent No.:	**5,497,008**
Issued:	**Mar. 5, 1996**
Appl. No.:	**08/383,605**
Filed:	**Feb. 1, 1995**

Related U.S. Application Data

(63) Continuation of application No. 08/259,337, filed on Jun. 13, 1994, now abandoned, which is a continuation of application No. 07/678,437, filed on Apr. 1, 1991, now abandoned, which is a continuation-in-part of application No. 07/678,208, filed on Apr. 1, 1991, now Pat. No. 5,192,869, which is a continuation-in-part of application No. 07/607,456, filed on Oct. 31, 1990, now abandoned.

(51) **Int. Cl.**
G02B 5/124 (2006.01)

(52) **U.S. Cl.** **250/505.1**

(58) **Field of Classification Search** 250/505.1; 378/34, 35; 313/103, 105
See application file for complete search history.

(56) **References Cited**

U.S. PATENT DOCUMENTS

4,780,903	A	10/1988	Soezima	378/145
4,887,282	A	12/1989	Mueller	378/34
5,192,869	A	3/1993	Kumakhov	250/505.1

FOREIGN PATENT DOCUMENTS

DE	18 03 806	B	6/1970
DE	240 091	A1	10/1986
GB	1 227 929		4/1971
GB	1 474 955		5/1977
JP	42-21460		10/1967
JP	56-067806		6/1981
JP	59-072052		4/1984
JP	5-27840		1/1985
JP	60-033227		2/1985
JP	62-106352		5/1987
JP	7-40080		12/1987
JP	01-185497		7/1989
JP	7-11600		1/1990
JP	02-216100		8/1990
RU	1322888		7/1984
RU	1776149		2/1990
RU	1702811		4/1990
SU	1322888	A1	7/1984
SU	1597009	A1	9/1988
SU	1769623		12/1989
WO	WO 88/01428		2/1988

OTHER PUBLICATIONS

Kolomijtsev et al., Abstract of "Focusing x–ray optical systems for soft radiation", The III All–Union Conference on Radiation of Relativistic Particles in Crystals, May 25–30, 1988, pp. 199–200.

Gubarev et al., Abstract of "Oriented Detector for x–ray radiation", The III All–Union Conference on Radiation of Relativistic Particles in Crystals, May 25–30, 1988, pp. 205–206.

Dr. Waldseth, "X–ray Energy Spectrometry", Kevex Corporation, pp 41–42, 70, 81, 83, 130; 1973.

(Continued)

Primary Examiner—Kiet T. Nguyen

(57) **ABSTRACT**
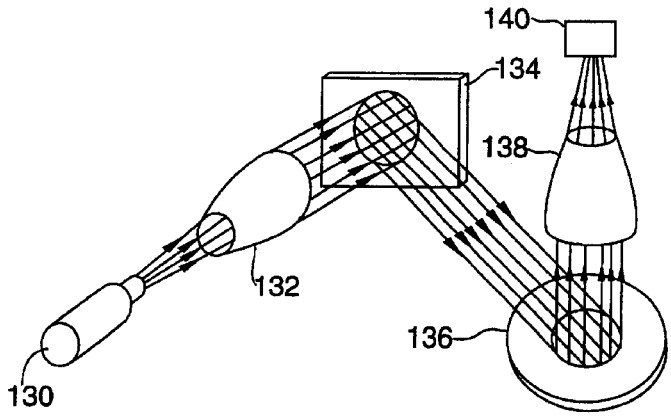
Analytic instruments using a Kumakhov lens are described. These instruments are useful for X-ray fluorescence analysis or spectroscopy, microscopy, digital subtraction analysis, electron microbeam analysis, X-ray diffraction and neutron diffraction, among others. The analytic instrument provide increased precision and accuracy over instrumentation known in the art. Methods for using these instruments are also taught.