US005497008A

United States Patent [19]

Kumakhov

[11] **Patent Number: 5,497,008**

[45] **Date of Patent: Mar. 5, 1996**

[54] **USE OF A KUMAKHOV LENS IN ANALYTIC INSTRUMENTS**

[75] Inventor: **Muradin A. Kumakhov**, Moscow, U.S.S.R.

[73] Assignee: **X-Ray Optical Systems, Inc.**, Albany, N.Y.

[21] Appl. No.: **383,605**

[22] Filed: **Feb. 1, 1995**

Related U.S. Application Data

[63] Continuation of Ser. No. 259,337, Jun. 13, 1994, abandoned, which is a continuation of Ser. No. 678,437, Apr. 1, 1991, abandoned, which is a continuation-in-part of Ser. No. 678,208, Apr. 1, 1991, Pat. No. 5,192,869, which is a continuation-in-part of Ser. No. 607,456, Oct. 13, 1990, abandoned.

[51] **Int. Cl.**[6] **G02B 5/124**

[52] **U.S. Cl.** **250/505.1**

[58] **Field of Search** 250/505.1; 378/34, 378/35; 313/103, 105

[56] **References Cited**

U.S. PATENT DOCUMENTS

3,821,510	6/1974	Muncheryan	219/121 L
3,979,621	9/1976	Yates	313/105 CM
3,979,637	9/1976	Siegmund	315/12 R
4,266,548	5/1981	Davi	128/303.1
4,418,689	12/1983	Kanazawa	128/6
4,583,539	4/1986	Karlin et al.	128/303.1
4,669,467	6/1987	Willett et al.	128/303.1
4,788,975	12/1988	Shturman et al.	128/303.1
4,950,939	8/1990	Tosswill	313/103 CM
4,987,582	1/1991	Webster et al.	378/85
5,001,737	3/1991	Lewis et al.	378/147
5,016,267	5/1991	Wilkins	378/85

FOREIGN PATENT DOCUMENTS

1803806	1/1977	Germany .
240091	10/1986	Germany .
1227929	4/1971	United Kingdom .
1474955	5/1977	United Kingdom .
8801428	2/1988	WIPO .

OTHER PUBLICATIONS

M. A. Kumakhov: in *Radiation of Charged Particles In Crystals* (Energoatomizdat, Moscow, 1986) p. 36 [in Russian].

V. A. Arkadjev et al., *Poverkhn. Fiz. Khim. Mekh.* No. 2, pp. 44–47 (1987) [in Russian].

V. A. Arkadjev et al., *Pis'ma Zh; Tekh.* vol. 14, pp. 97–98 (1988) [in Russian].

Abstracts: 3rd Soviet Conf. Radiation of Charged Particles in Crystals (Kabardino–Balkarian Univ. Press, Nalchik, 1988).

F. F. Komarov et al.; pp. 175–176 [in Russian] ibid V. A. Arkadjev et al.; pp. 191–192 [in Russian].

ibid. M. V. Gubarev et al., pp. 195–196 [in Russian].

ibid A. I. Kolomijzev et al.; pp. 199–200 [in Russian; English translation supplied].

ibid V. E. Kovansev et al.; pp. 214–215 [in Russian; English translation supplied].

ibid V. E. Kovansev et al.; pp. 216–217; [in Russian].

V. A. Arkad'ev et al. *Sov. Phys. Usp.*, vol. 32, No. 3, pp. 271–276 (Mar. 1989) [published English translation of *Usp. Fiz. Nauk*, vol. 157, pp. 529–537 (Mar. 1989)].

M. A. Kumakhov & F. F. Komarov; *Physics Reports;* vol. 191, pp. 289–350 (1990) [in English].

Book of Abstracts: The IVth All–Union Conference on Interaction of Radiation With Solids (Moscow, 1990).

(List continued on next page.)

Primary Examiner—Jack I. Berman
Assistant Examiner—Kiet T. Nguyen
Attorney, Agent, or Firm—Lieberman & Nowak

[57] **ABSTRACT**

Analytic instruments using a Kumakhov lens are described. These instruments are useful for X-ray fluorescence analysis or spectroscopy, microscopy, digital subtraction analysis, electron microbeam analysis, X-ray diffraction and neutron diffraction, among others. The analytic instrument provide increased precision and accuracy over instrumentation known in the art. Methods for using these instruments are also taught.
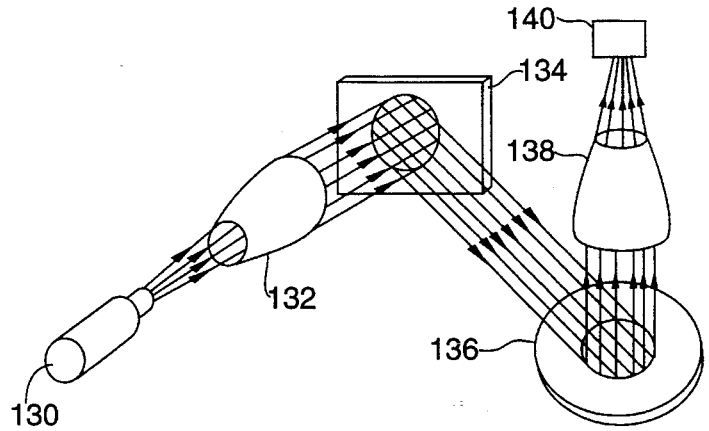
30 Claims, 7 Drawing Sheets