US005890908A

United States Patent [19]

Lampotang et al.

[11] **Patent Number: 5,890,908**

[45] **Date of Patent: Apr. 6, 1999**

[54] **APPARATUS FOR AND METHOD OF SIMULATING THE INJECTION AND VOLATILIZING OF A VOLATILE DRUG**

[75] Inventors: **Samsun Lampotang; Willem L. van Meurs; Michael L. Good; Joachim S. Gravenstein; Ronald G. Carovano**, all of Gainesville, Fla.

[73] Assignee: **University of Florida Research Foundation**, Gainsville, Fla.

[21] Appl. No.: **768,145**

[22] Filed: **Dec. 17, 1996**

Related U.S. Application Data

[60] Division of Ser. No. 188,383, Jan. 27, 1994, Pat. No. 5,584,701, which is a continuation-in-part of Ser. No. 882, 467, May 13, 1992, Pat. No. 5,391,081.

[51] **Int. Cl.**[6] **G09B 23/28**

[52] **U.S. Cl.** **434/268**; 434/272

[58] **Field of Search** 434/262, 267, 434/268, 272; 128/203.12, 203.21, 204.13, 203.26, 203.27; 604/892.1

[56] **References Cited**

U.S. PATENT DOCUMENTS

3,520,071	7/1970	Abrahamson et al. .	
3,661,052	5/1972	Lucien et al. .	
3,808,706	5/1974	Mosley et al. .	
3,840,009	10/1974	Michaels et al.	604/892.1
4,167,070	9/1979	Orden .	
4,561,851	12/1985	Ferreira et al. .	
4,570,640	2/1986	Barsa .	
4,878,388	11/1989	Loughlin et al. .	
4,907,973	3/1990	Hon .	
5,403,192	4/1995	Kleinwaks et al. .	

OTHER PUBLICATIONS

M.L. Good, M.D., and J.S. Gravenstein, M.D., *Anesthesia Simulators and Training Device,* International Anesthesiology Clinics 27:161–164 (1989).

Good, et al., *Hybrid Lung Model for Use in Anesthesia Research and EducationAnesthesiology,* Hybrid Lung Model for Use in Anesthesia Research and Education, 71:982–984 (1989).

D.M. Gaba, M.D. and A. DeAnda, *A Comprehensive Anesthesia Simulation Environment: Re–creating the Operating Room for Research and Training,* Anesthesiology, 69:387–389 (1988).

M.L. Good, et al., *Critical Events Stimulation for Training in Anesthesiology,* Journal of Clinical Monitoring, 4:140 (1988).

S. Lampotang, et al., *A lung model of carbon dioxide concentrations with mechanical or spontaneous ventilation,* Critical Care Medicine, 14:1055–1057,(1986).

S. Abrahamson, *Chapter 31: Human Stimulation for Training in Anesthesiology,* Medical Engineering, pp. 370–374.

J.S. Densen, M.D. and S. Abrahamson, Ph.D., *A Computer–Controlled Patient Stimulator,* JAMA, 208:504–508, (1969).

Ross et al., *Servocontrolled Closed Circuit Anaesthsia: A method for the automatic control of anaethesia produced by a volatile agent in oxygen,* British Journal of Anesthesia, 44:1053–1060 (1983).

Primary Examiner—John P. Leubecker
Attorney, Agent, or Firm—Needle & Rosenberg, P.C.

[57] **ABSTRACT**

An apparatus and method for injecting and volatilizing a volatile drug in a patient simulator, including a manikin, a gas supply and a drug volatilization device. The drug volatilization device includes a thermal conductor defining a gas propagation cavity, a sintered insert, and a needle accepting cavity. A simulated response to the drug is calculated, and an output device associated with the manikin is actuated to simulate the effect of the drug.
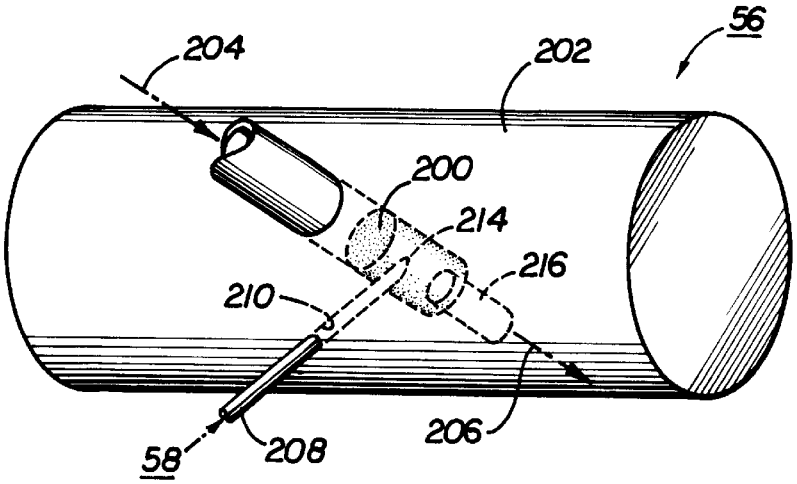
6 Claims, 7 Drawing Sheets