June 16, 1959 A. Z. SÉROR 2,890,808

TAPE APPLICATOR

Filed Oct. 16, 1956 2 Sheets-Sheet 1

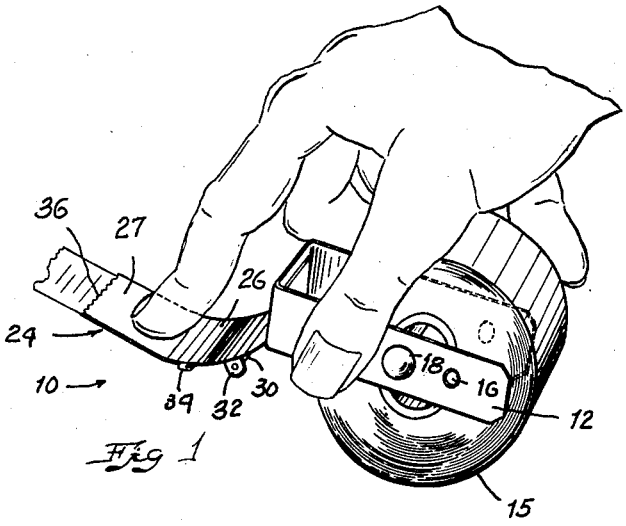

Fig 1

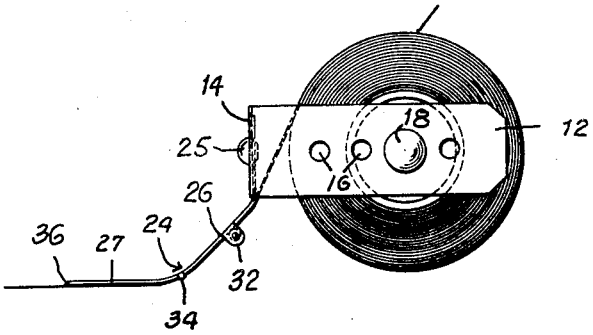

Fig 2

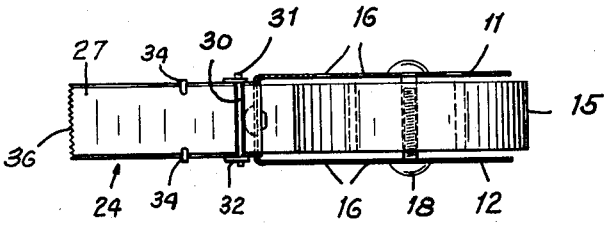

Fig 3

INVENTOR.
ALBERT Z. SÉROR
BY
Sabin C. Bronson.