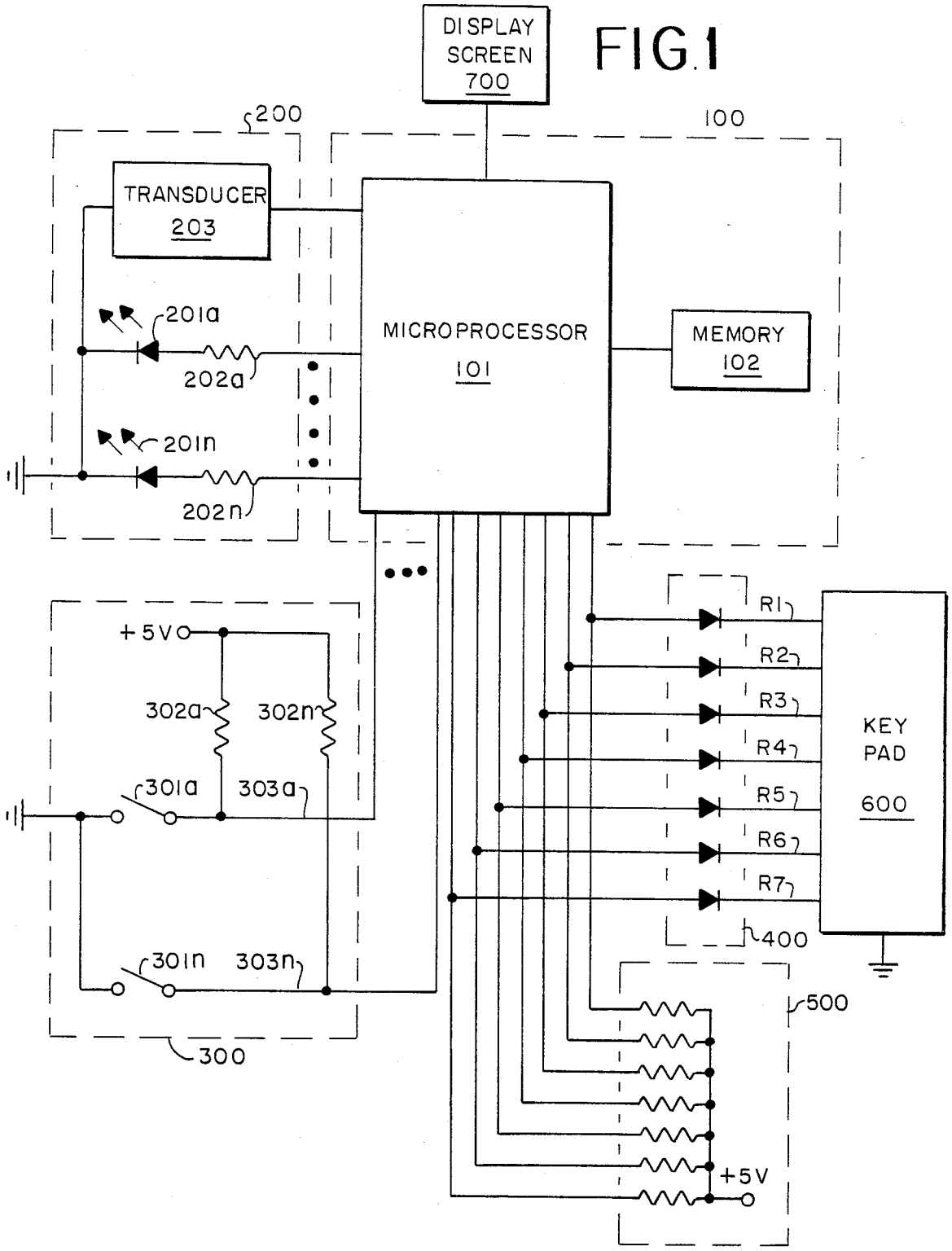
DISPLAY SCREEN 700
FIG.1
200
100
TRANSDUCER 203
MICROPROCESSOR 101
MEMORY 102
201a
202a
201n
202n
+5V
302a
302n
301a
303a
301n
303n
300
R1
R2
R3
R4
R5
R6
R7
KEY PAD 600
400
500
+5V