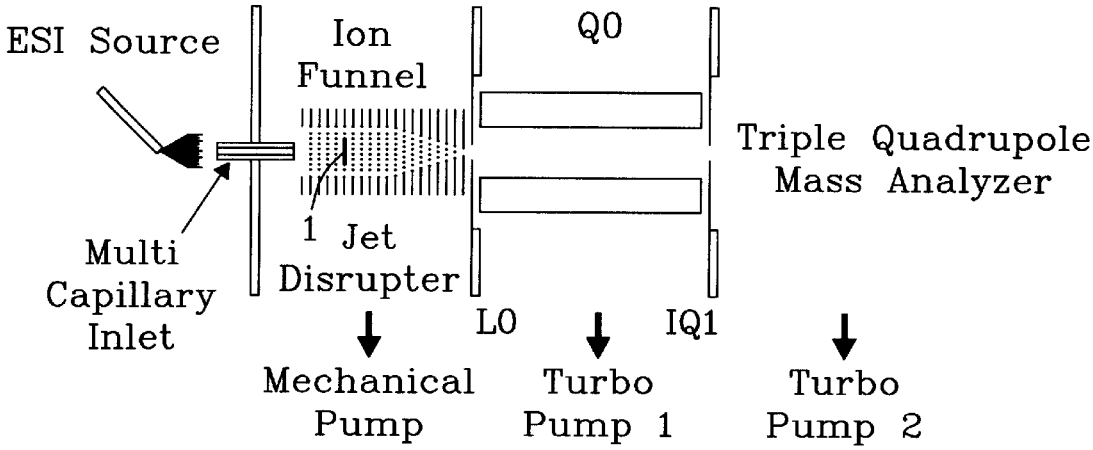
ESI Source
Ion Funnel
Q0
Triple Quadrupole Mass Analyzer
Multi Capillary Inlet
1 Jet Disrupter
L0
IQ1
Mechanical Pump
Turbo Pump 1
Turbo Pump 2

Fig. 1

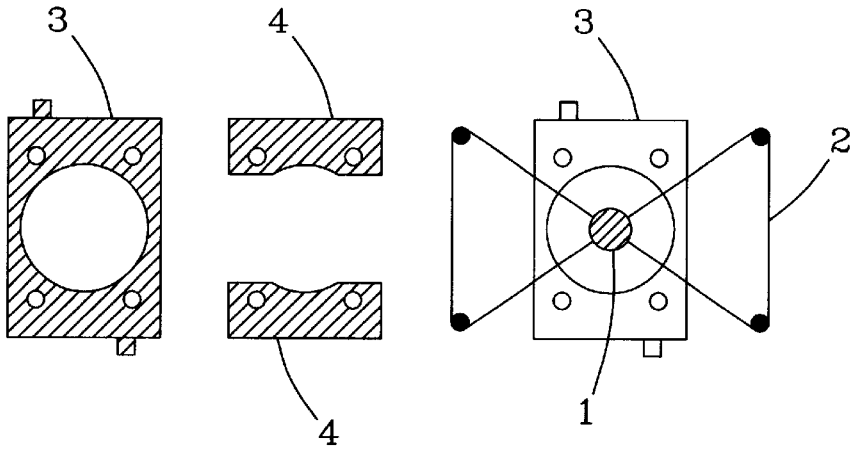
3
4
3
2
4
1

Fig. 2