US005482608A

United States Patent [19]

Keely et al.

[11] **Patent Number: 5,482,608**

[45] **Date of Patent: Jan. 9, 1996**

[54] **CAPILLARY ELECTROPHORESIS FLOW CONTROL SYSTEM**

[75] Inventors: **Catherine A. Keely**, Cupertino; **Douglass McManigill**, Palo Alto; **Robert R. Holloway**, Montara, all of Calif.

[73] Assignee: **Hewlett Packard Company**, Palo Alto, Calif.

[21] Appl. No.: **6,353**

[22] Filed: **Jan. 19, 1993**

[51] **Int. Cl.**[6] **C25B 9/00**

[52] **U.S. Cl.** ..... **204/299 R**; 204/180.1; 204/182.8; 356/344

[58] **Field of Search** ..... 204/180.1, 182.5, 204/299 R; 356/344

[56] **References Cited**

U.S. PATENT DOCUMENTS

3,705,845	12/1972	Everaerts	204/299 R
3,869,365	3/1975	Sunden	204/180
4,906,344	3/1990	Hjerten	204/299 R
5,061,361	11/1991	Gordon	204/299 R
5,302,264	4/1994	Welch et al.	204/180.1

FOREIGN PATENT DOCUMENTS

0395796 11/1990 European Pat. Off. .

OTHER PUBLICATIONS

Ravindra Datta, Veerabhadra R. Kota Marthi, "Electrokinetic Dispersion In Capillary Electrophoresis," Jun. 1990, vol. 36, No. 6, pp. 916–926.

CA 113 (23): 207828y, Single–stranded RNA molecular weight and shape determination by differential pressure capillary viscometry, sedimentation velocity, and gel electrophoresis.

CA 113 (26): 238658x, High Pressure and Super–critical Capillary Electrophoresis.

Everaerts et al., Journal of Chromotography, 60:397–405 (1971).

Everaerts et al., Journal of Chromotography, 19:262–268 (1970).

Primary Examiner—John Niebling
Assistant Examiner—C. Delacroix Muirheid

[57] **ABSTRACT**

A system for controlling the bulk flow rate in capillary electrophoresis employs pressure to increase velocity without unacceptably increasing plate height. Thus, the system controls bulk flow over a range of velocities, independent of the chemistry of the system. Additionally, the use of pressure under certain conditions may decrease plate height and improve resolution.
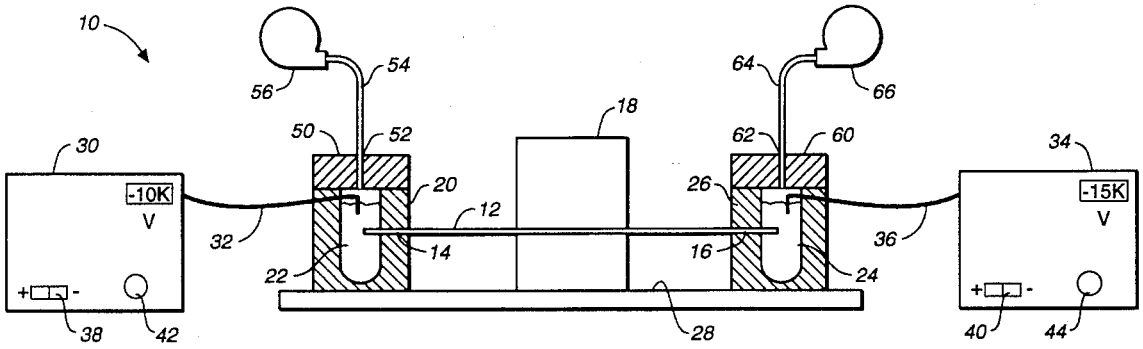
12 Claims, 4 Drawing Sheets