US005979108A

United States Patent [19]

Adams

[11] **Patent Number: 5,979,108**

[45] **Date of Patent: *Nov. 9, 1999**

[54] **PEST CONTROL DEVICE**

[75] Inventor: **Andrew John Adams**, Bucks, United Kingdom

[73] Assignee: **AgrEvo Environment Health Limited**, Cambridge, United Kingdom

[*] Notice: This patent issued on a continued prosecution application filed under 37 CFR 1.53(d), and is subject to the twenty year patent term provisions of 35 U.S.C. 154(a)(2).

[21] Appl. No.: **08/765,969**

[22] PCT Filed: **Jul. 7, 1995**

[86] PCT No.: **PCT/EP95/02701**

§ 371 Date: **Jan. 16, 1997**

§ 102(e) Date: **Jan. 16, 1997**

[87] PCT Pub. No.: **WO96/02134**

PCT Pub. Date: **Feb. 1, 1996**

[30] **Foreign Application Priority Data**

Jul. 18, 1994 [GB] United Kingdom 9414451

[51] **Int. Cl.**[6] **A01M 25/00**

[52] **U.S. Cl.** **43/121**; 43/131

[58] **Field of Search** 43/114, 121, 132.1, 43/108, 131, 107, 61; D22/119, 120, 122; 119/652, 656, 660, 661, 662, 622, 663, 664, 672

[56] **References Cited**

U.S. PATENT DOCUMENTS

3,777,716	12/1973	Cortner, Jr.	119/672 X
4,709,504	12/1987	Andric	43/114
4,970,822	11/1990	Sherman	43/131

FOREIGN PATENT DOCUMENTS

0281744	9/1988	European Pat. Off. .
0297214	1/1989	European Pat. Off. .
9222200	12/1992	WIPO .

Primary Examiner—David A. Scherbel
Assistant Examiner—Anthony Ojini
Attorney, Agent, or Firm—Ostrolenk, Faber, Gerb & Soffen, LLP

[57] **ABSTRACT**

A device for controlling crawling pests comprising a tunnel in which the ceiling is treated with a pest control agent and the gap between floor and ceiling in the treated area decreases from at least one edge of the treated area. A pest entering the device receives a topical dose of the pesticide control agent on its upper parts.
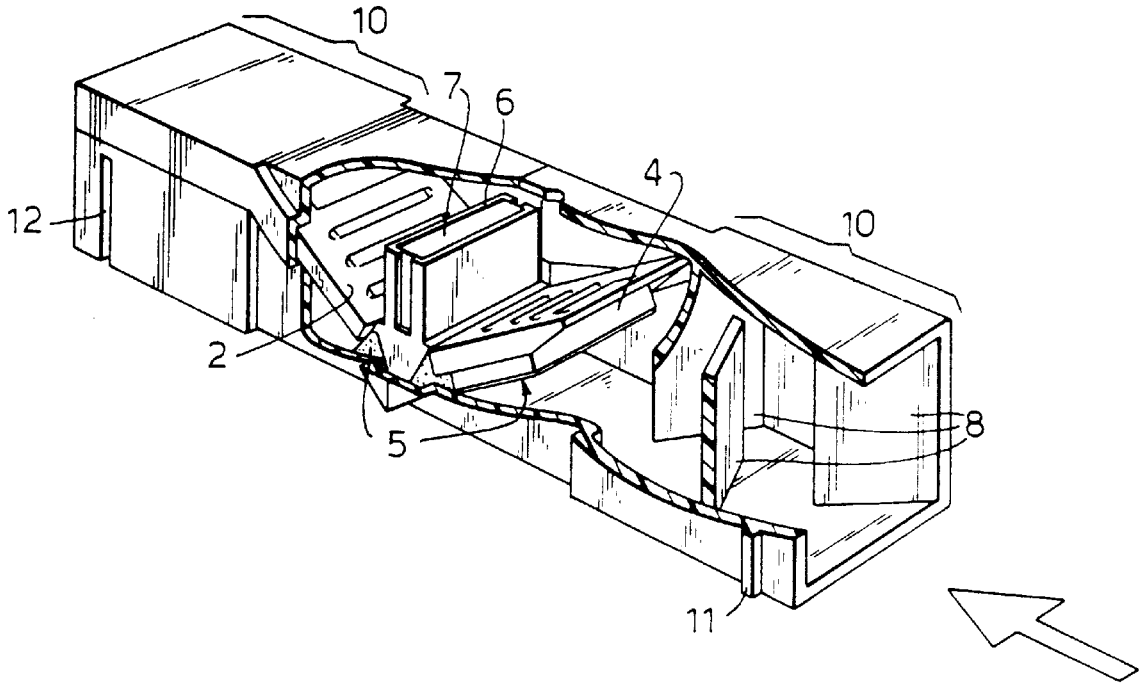
32 Claims, 6 Drawing Sheets