US008956408B2

(12) **United States Patent**
Smiley et al.

(10) **Patent No.: US 8,956,408 B2**
(45) **Date of Patent: Feb. 17, 2015**

(54) **LENS DELIVERY SYSTEM**

(75) Inventors: **Terah Whiting Smiley**, San Francisco, CA (US); **John A. Scholl**, San Ramon, CA (US); **David John Smith**, Highland, CA (US); **Russell J. Redmond**, Goleta, CA (US); **Derek L. Moran**, Goleta, CA (US); **Barry Cheskin**, Los Altos, CA (US); **John Reggie**, San Mateo, CA (US); **Gregory Vinton Matthews**, San Francisco, CA (US); **Claudio Argento**, Los Gatos, CA (US)

(73) Assignee: **PowerVision, Inc.**, Belmont, CA (US)

(*) Notice: Subject to any disclaimer, the term of this patent is extended or adjusted under 35 U.S.C. 154(b) by 268 days.

(21) Appl. No.: **12/178,565**

(22) Filed: **Jul. 23, 2008**

(65) **Prior Publication Data**

US 2009/0030425 A1 Jan. 29, 2009

Related U.S. Application Data

(60) Provisional application No. 60/951,439, filed on Jul. 23, 2007.

(51) **Int. Cl.**
A61F 2/16 (2006.01)
A61F 9/00 (2006.01)

(52) **U.S. Cl.**
CPC ***A61F 2/1675*** (2013.01); ***A61F 2/1678*** (2013.01)
USPC **623/6.12**; 606/107

(58) **Field of Classification Search**
USPC 606/107, 166; 623/4.1, 5.11, 5.14, 623/6.11–6.13, 905–907
See application file for complete search history.

(56) **References Cited**

U.S. PATENT DOCUMENTS

4,111,995	A	9/1978	Nelson
4,251,887	A	2/1981	Anis
4,253,199	A	3/1981	Banko
4,254,509	A	3/1981	Tennant
4,304,895	A	12/1981	Loshaek
4,373,218	A	2/1983	Schachar
4,409,691	A	10/1983	Levy
4,423,809	A	1/1984	Mazzocco
4,435,856	A	3/1984	L'Esperance
4,466,705	A	8/1984	Michelson
4,490,860	A	1/1985	Rainin
4,494,254	A	1/1985	Lopez
4,512,040	A	4/1985	McClure
4,528,311	A	7/1985	Beard et al.
4,575,373	A	3/1986	Johnson
4,585,457	A	4/1986	Kalb

(Continued)

FOREIGN PATENT DOCUMENTS

CN	101277659	A	10/2008
EP	0898972	A2	3/1999

(Continued)

OTHER PUBLICATIONS

Shadduck, John H.; U.S. Appl. No. 12/347,816 entitled "Intraocular lenses and business methods," filed Dec. 31, 2008.

(Continued)

Primary Examiner — Ashley Fishback
(74) *Attorney, Agent, or Firm* — Shay Glenn LLP

(57) **ABSTRACT**

Delivery devices for delivering an ophthalmic device into an eye. In some embodiments the delivery devices are adapted to deliver an intraocular lens into an eye.
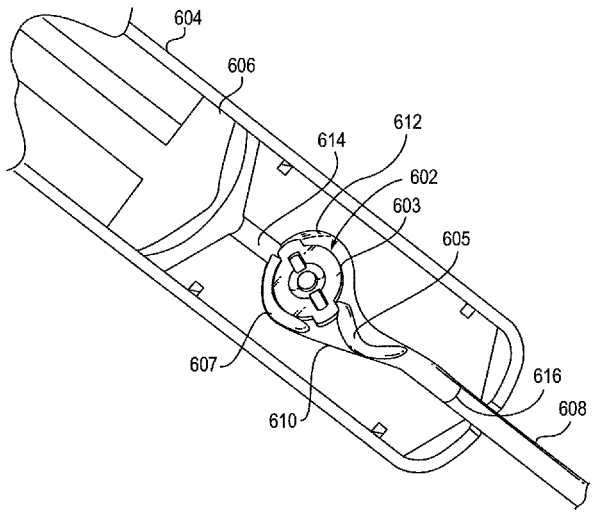
12 Claims, 19 Drawing Sheets