June 26, 1956 F. J. WALLACE 2,751,908

SURGICAL INSTRUMENT

Filed March 19, 1953

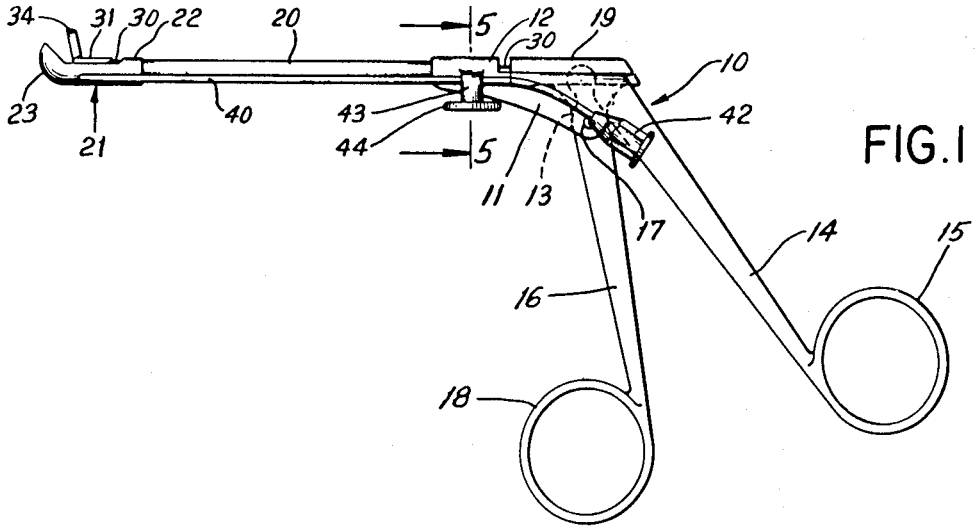

FIG. 1

FIG. 2

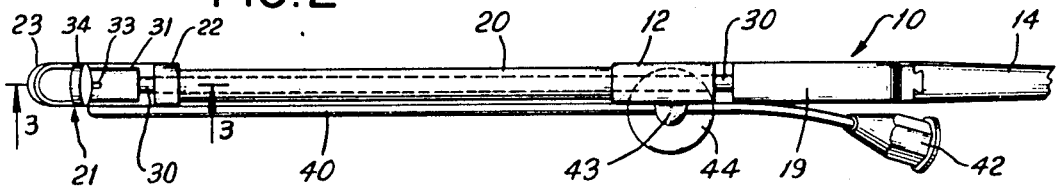

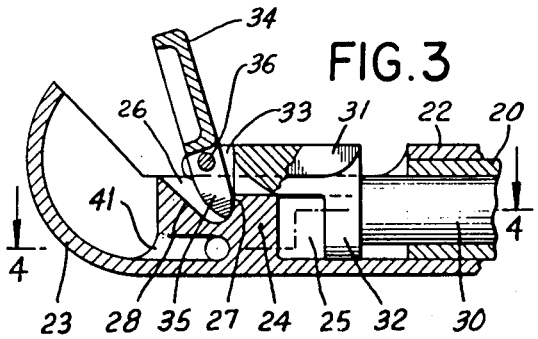

FIG. 3

FIG. 4

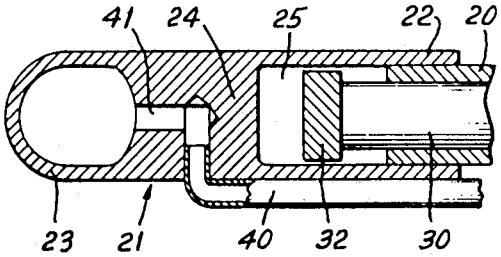

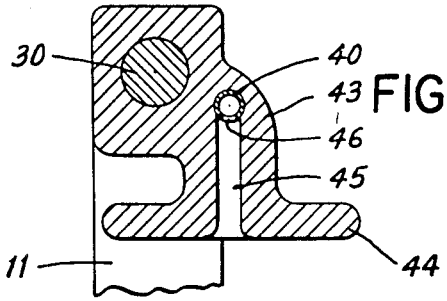

FIG. 5