US009637008B2

(12) **United States Patent**
Sonoda et al.

(10) **Patent No.: US 9,637,008 B2**
(45) **Date of Patent: May 2, 2017**

(54) **GENERATOR MOTOR UNIT, POWER OUTPUT ENGINE, AND VEHICLE**

(71) Applicant: **HONDA MOTOR CO., LTD.**, Tokyo (JP)

(72) Inventors: **Yutaka Sonoda**, Wako (JP); **Tatsuya Shiozawa**, Wako (JP); **Katsuhiro Ouchi**, Wako (JP); **Takeshi Yanagisawa**, Wako (JP); **Ryota Takagi**, Wako (JP); **Atsushi Katayama**, Wako (JP); **Hitoshi Kurosaka**, Wako (JP)

(73) Assignee: **HONDA MOTOR CO., LTD.**, Tokyo (JP)

(*) Notice: Subject to any disclaimer, the term of this patent is extended or adjusted under 35 U.S.C. 154(b) by 49 days.

(21) Appl. No.: **14/772,449**

(22) PCT Filed: **Dec. 10, 2013**

(86) PCT No.: **PCT/JP2013/083079**
§ 371 (c)(1),
(2) Date: **Sep. 3, 2015**

(87) PCT Pub. No.: **WO2014/136343**
PCT Pub. Date: **Sep. 12, 2014**

(65) **Prior Publication Data**

US 2016/0009185 A1 Jan. 14, 2016

(30) **Foreign Application Priority Data**

Mar. 8, 2013 (JP) 2013-046997

(51) **Int. Cl.**
B60L 9/00 (2006.01)
B60L 11/00 (2006.01)
(Continued)

(52) **U.S. Cl.**
CPC ***B60L 11/14*** (2013.01); ***B60K 6/26*** (2013.01); ***B60K 6/448*** (2013.01); ***B60K 6/485*** (2013.01);
(Continued)

(58) **Field of Classification Search**
USPC ..... 701/1, 22; 180/65.265; 290/1 R, 31; 310/198; 903/906, 930
See application file for complete search history.

(56) **References Cited**

U.S. PATENT DOCUMENTS

5,530,309 A * 6/1996 Weldon H02K 31/02 310/178
5,988,307 A * 11/1999 Yamada B60K 6/26 180/243
(Continued)

FOREIGN PATENT DOCUMENTS

CN 2640115 Y 9/2004
DE 43 18 949 C1 6/1994
(Continued)

OTHER PUBLICATIONS

Japanese Notice of Allowance with English Translation dated May 17, 2016, 6 pages.
(Continued)

Primary Examiner — Ronnie Mancho
(74) *Attorney, Agent, or Firm* — Rankin, Hill & Clark LLP

(57) **ABSTRACT**
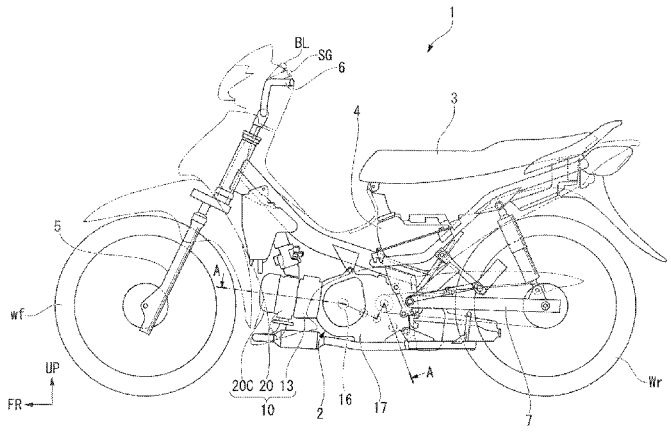
A generator motor unit includes a generator motor including a rotor equipped with magnets, and magnetic bodies that protrude from a wall surface, a first stator that makes magnetic flux act on the magnets, thereby generating torque in the rotor, and a second stator that makes magnetic flux act on the magnetic bodies, thereby generating torque in the
(Continued)