April 28, 1964 J. E. KENNARD 3,131,108

DEVICE FOR MOUNTING WALLBOARD TAPE

Filed Aug. 8, 1960 2 Sheets-Sheet 1

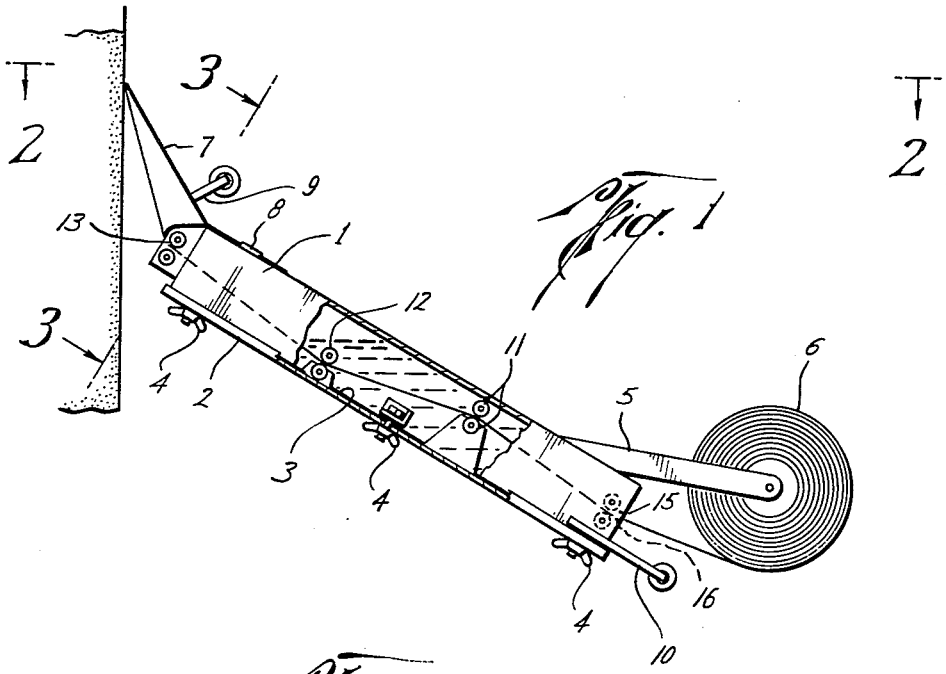

Fig. 1

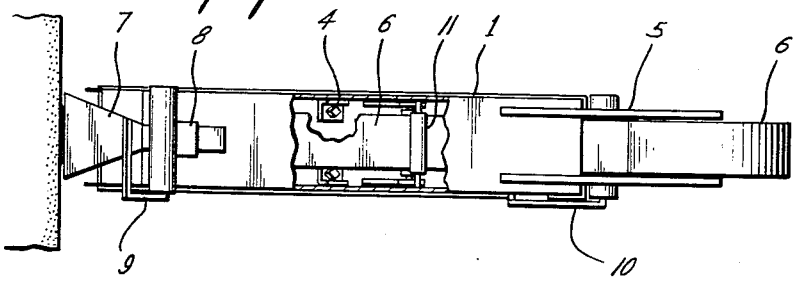

Fig. 2

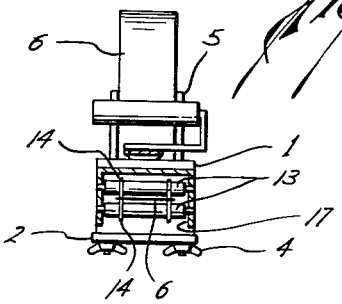

Fig. 3

James E. Kennard
INVENTOR.

BY Ramsey O Wyatt
ATTORNEY