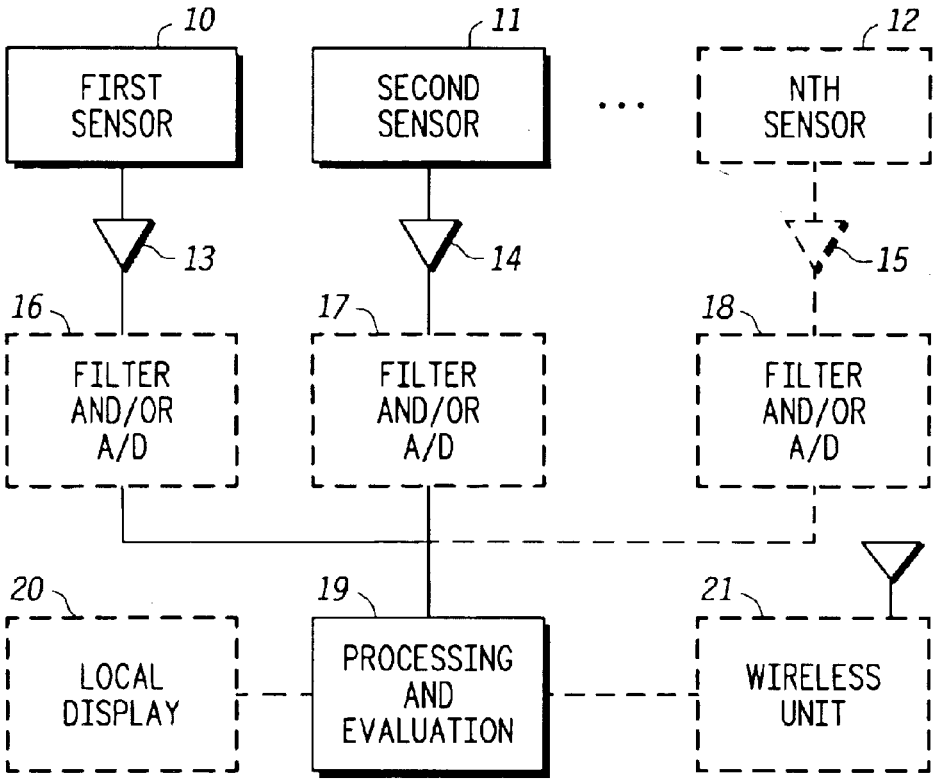
10
FIRST SENSOR
11
SECOND SENSOR
12
NTH SENSOR
13
14
15
16
FILTER AND/OR A/D
17
FILTER AND/OR A/D
18
FILTER AND/OR A/D
20
LOCAL DISPLAY
19
PROCESSING AND EVALUATION
21
WIRELESS UNIT

FIG.1

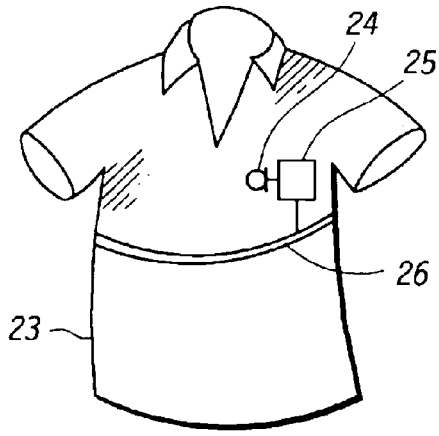
24
25
26
23

FIG.2